Public Interest Energy Research (PIER) Program

FINAL PROJECT REPORT

Demonstration of Rack-Mounted Computer Equipment Cooling Solutions

Prepared for: California Energy Commission

Prepared by: Lawrence Berkeley National Laboratory

H. C. Coles

SEPTEMBER 2010

CEC-XXX-2010-XXX

Prepared by:

Primary Author(s):
Henry C. Coles, MSME
Lawrence Berkeley National Laboratory
Berkeley, CA 94720

Contract Number: 500-09-002

Prepared for:

California Energy Commission

Paul Roggensack
Contract Manager

Mike Lozano
Program Area Lead
Industrial/Agricultural/Water End-Use Energy Efficiency

Paul Roggensack
Project Manager

Virginia Lew
Office Manager
Energy Efficiency Research Office

Thom Kelly, PhD
Deputy Director
ENERGY RESEARCH & DEVELOPMENT DIVISION

Melissa Jones
Executive Director

DISCLAIMER

This report was prepared as the result of work sponsored by the California Energy Commission. It does not necessarily represent the views of the Energy Commission, its employees or the State of California. The Energy Commission, the State of California, its employees, contractors and subcontractors make no warrant, express or implied, and assume no legal liability for the information in this report; nor does any party represent that the uses of this information will not infringe upon privately owned rights. This report has not been approved or disapproved by the California Energy Commission nor has the California Energy Commission passed upon the accuracy or adequacy of the information in this report.

ACKNOWLEDGEMENTS

This work was supported by the California Energy Commission's Public Interest Energy Research (PIER) Program, under Contract No. 500-09-002, and by the Assistant Secretary for Energy Efficiency and Renewable Energy, Building Technologies Program, of the U.S. Department of Energy under Contract No. DE-AC02-05CH11231.

Special appreciation is extended to the Silicon Valley Leadership Group for encouraging their member companies to perform demonstrations of energy efficiency technologies related to data centers and presenting the results in the data center ―Summit" hosted by a member company.

Additional thanks are extended to William Tschudi, Geoffrey Bell, Steve Greenberg, Dale Sartor, Rod Mahdavi, Girish Ghatikar and Paul Mathew of Lawrence Berkeley National Laboratory for technical assistance and oversight of the project.

Special thanks to Sun Microsystems, Inc. for hosting the demonstration and providing test facilities and project management.

Thanks to Synapsense and OSI for extensive support providing energy-related sensors, data recording, and real-time data monitoring.

Thanks to Ray Pfeifer (Synapsense), Mark Hydeman (Taylor Engineering), Peter Rumsey (Rumsey Engineers) Jud Cooley (Sun Microsystems, Inc.), and Dean Nelson (eBay Inc.) for energy metrics development.

Special thanks to Vic Mahaney (IBM) for realizing and formulating the direct relationship, under certain conditions, between the coefficient of performance that includes all of the power components and the Chill-Off energy efficiency evaluation metric.

PREFACE

The California Energy Commission Public Interest Energy Research (PIER) Program supports public interest energy research and development that will help improve the quality of life in California by bringing environmentally safe, affordable, and reliable energy services and products to the marketplace.

The PIER Program conducts public interest research, development, and demonstration (RD&D) projects to benefit California.

The PIER Program strives to conduct the most promising public interest energy research by partnering with RD&D entities, including individuals, businesses, utilities, and public or private research institutions.

PIER funding efforts are focused on the following RD&D program areas:

- Buildings End-Use Energy Efficiency
- Energy Innovations Small Grants
- Energy-Related Environmental Research
- Energy Systems Integration
- Environmentally Preferred Advanced Generation
- Industrial/ Agricultural/ Water End-Use Energy Efficiency
- Renewable Energy Technologies
- Transportation

Demonstration of Rack-Mounted Computer Equipment Cooling Solutions is the final report for the task within the project entitled Data Center Energy Efficiency and Demonstration Projects (contract number 500-09-002, conducted by Lawrence Berkeley National Laboratory. The information from this project contributes to PIER‘ s Industrial/ Agricultural/ Water End-Use Energy Efficiency Program.

For more information about the PIER Program, please visit the Energy Commission‘ s website at www.energy.ca.gov/ research/ or contact the Energy Commission at 916-654-4878.

ABSTRACT

Eleven cooling systems, for rack mounted computer equipment were evaluated and compared for their cooling effectiveness and their energy. The cooling systems were of various designs but all are, what is termed, close coupled or enclosed, and they all ultimately transferred heat to the building chilled water system. The types of cooling systems tested were: rack cooler with air to water heat exchanger, row type rack cooler with air to refrigerant or air to water heat exchanger, rack rear door passive cooler with air to refrigerant or air to water heat exchanger, a prototype direct touch cooling system using refrigerant and a design consisting of a container type enclosure cooled with chilled water.

A number of energy-efficiency metrics and test parameters were introduced and used for comparison. The energy efficiency metrics follow industry standard methods with some modifications. A set of three metrics calculates and compares energy efficiency using an algorithm of cooling provided divided by the electrical power needed. Another metric includes the power required for the rack mounted electronic equipment thus providing a metric for total power required.

All of the devices were effective in cooling the IT equipment. The overall energy use efficiency varied by a small amount across all devices currently on the market.

Keywords: Server rack cooling, server cooling, , datacenter cooling, refrigerant rack cooling, computer equipment cooling

Please use the following citation for this report:

Coles, Henry C. (Lawrence Berkeley National Laboratory). 2010. *Evaluation of Rack-Mounted Computer Equipment Cooling Solutions*. California Energy Commission. Publication number: CEC-XXX-2010-XXX.

TABLE OF CONTENTS

Acknowledgements i

PREFACE ii

ABSTRACT iii

TABLE OF CONTENTS iv

EXECUTIVE SUMMARY 1

CHAPTER 1: Introduction 4

Rack Cooler 4

Row Cooler 5

Rear Door Cooler 6

Direct Touch Cooling (Dtc) 7

Cooling Solution as Part of a Modular Datacenter 8

CHAPTER 2: Project Methods 10

Measurement Plan and Test Layout 10

Assumptions and Definitions 14

Direct Touch Cooling Device 15

Assumptions for the Energy Use Comparison Calculations 16

Test Quality Indicators 17

Data Recording 19

Description of Terms and Metrics Used to Compare Cooling Devices 20

Chilled Water Plant Power (—CWP") 20

Feed Pump Power (—ASHRAE Feed") 21

CDU Power (—CDU" or —CDU Prorated") 22

Cooling Device Power (—Device") 22

Unit Under Test Power (—UUT") 23

Gross Sensible Capacity (—GSC") 23

Net Cooling Provided (—NC") 23

Server Power – (—IT") 26

Comparison Metrics 27

Metric 1: $SCOP_a$ 27

Metric 2: SCOPb 27
Metric 3: SCOPc 27
Metric 4: Chill-0ff 2 Energy Efficiency (—COEE") 27
CHAPTER 3: Project Results 29
Comparison Calculation Information 29
$SCOP_a$ Results 31
$SCOP_b$ Results 33
$SCOP_c$ Results 35
COEEc Results 38
Modular Datacenter Test Results 41
CHAPTER 4: Conclusions and Recommendations 42
CHAPTER 5: References 44
CHAPTER 6: Glossary 45
APPENDIX A: CRAH Performance Information 47
APPENDIX A - continued: CRAH Performance Calculation 48
APPENDIX B: Chilled Water Plant Models Description 49
APPENDIX C: Test Recorded Data 51
APPENDIX D: Test Quality Data 52
APPENDIX E: Adjusted Test Data 53
APPENDIX F: Calculated Data 54
APPENDIX G: Calculations COEEc, SCOPc 55
APPENDIX H: SCOPa results with CDU added 57
APPENDIX I: SCOPb results with CDU added 58
APPENDIX J: Calculated Data-CDU Added 59
APPENDIX K: Server Power vs. Temp. Inlet 60
APPENDIX L:Chilled Water Plant A vs. Plant B for COEEc 61
APPENDIX M: Kilowatts per Ton from SCOPa 62
APPENDIX N: Final Results – CDU Added 63
APPENDIX O: Final Results – CDU Not Added 64

EXECUTIVE SUMMARY

Introduction

A number of devices used to cool rack-mounted computer equipment were introduced in the last several years. In July 2009 a series of energy-efficiency tests -project name Chill-Off 2-, hosted by Oracle (previously SUN Microsystems) in Santa Clara, California, was started to evaluate 11 of these devices. The testing was completed in March of 2010.

This report presents the evaluation methods and results of the testing of these cooling devices. The devices were provided by the original equipment manufacturers. The devices had various design features but all could be described as close-coupled from a heat transfer point of view. *Close-coupled* means the heat exchanger transferring the heat from the rack-mounted equipment is within a few feet of the rack-mounted equipment and includes containment to constrict air mixing with the surroundings. All of the devices used chilled water for the final heat transfer from the rack-mounted electronic equipment to the building system, but some devices used refrigerant, circulated using a low pressure drop system as a primary heat transfer fluid. The low-delta pressure refrigerant cycle provides circulation of a low viscosity fluid with good heat capacity characteristics, and therefore it does not require the high pumping power found in a conventional refrigerant system.

Purpose

The purpose of this study was to evaluate and compare a variety of commercially available, modular devices used to cool rack-mounted computer equipment including their cooling effectiveness and energy efficiency.

Objective

The devices were thermally tested and compared. A primary objective was to investigate how energy efficiency and performance varied as a function of chilled water supply temperature and server air inlet temperature. Seven different combinations of chilled water supply and server air inlet temperatures were developed, to investigate how each device would perform for different conditions.

In addition, the energy efficiency performance of two chilled water plants was modeled to investigate energy use as a function of chilled water supply temperature. Including the power needed to make the chilled water allowed the use of comparison metrics containing all the power needed to provide cooling. One model was a typical design without economizers, and the other was equipped with a water-side economizer.

Four power-evaluation metrics were developed and used as a basis for comparing the devices. Three of the metrics were similar to terminology in the ASHRAE 127-2007 Standard used for evaluating computer and data processing room unitary air-conditioners. These first three metrics use coefficient of performance and net cooling concepts that follow the ASHRAE standard.

The forth metric includes the power needed for the rack-mounted computer equipment and considers the ratio of total power needed for the cooling plus the electronic equipment to the

power needed for the electronic equipment. This ratio has the advantage of being easy to use in estimating the total power needed if the power for the electronic equipment is known.

Conclusions and Recommendations

The results showed that all of the devices were effective in cooling IT equipment and there was only a small variation in energy efficiency across the ten devices tested when considering the total power needed for cooling and including the IT equipment power.

Using the total energy efficiency metric COEEc, as defined in this report, the highest to lowest performance varied by 13 percent. This was across all ten devices, including the full range of test parameters. For a given test parameter combination, for example 55°F (12.7°C) chilled water and 72°F (22.2°C) server air inlet the range from highest to lowest COEEc performance across the devices was 6-8 percent, which saves $180,000 per year for a one megawatt IT load data center considering California PG&E peak pricing.

Four of the devices tested were of the passive rear door type. These devices had somewhat better energy efficiency in general compared to other devices for a number of reasons including not requiring power for fans. The passive rear door devices produce additional airflow restriction that needs to be overcome by the IT equipment fans, however, the tests performed did not reveal any energy efficiency or other related issues connected with this phenomenon. There were two categories of passive rear doors: 1) water cooled and 2) refrigerant cooled. The water cooled type can perform slightly better than the refrigerant passive doors if a water-to-water cooling distribution unit (CDU) is not included. The analysis includes adding a water-to-water CDU, in these cases the some refrigerant devices perform better than the water cooled devices. The test parameters ranged from 45°F (7.2°C) to 60F (15.5°C) chilled water supply and 60F (15.5°C) to 90F (32.2°C) server air inlet temperature. There was a general trend for improved energy efficiency as the temperature of the chilled water supply increased. Some devices exhibited reduced energy efficiency at high server air inlet temperatures 80F (26.6°C) and 90F (32.2°C), the most likely cause is unnecessarily high cooling device fan speeds, this was not fully investigated.

Some comparison metrics included the power needed to make the chilled water. Two chilled water plant models (ASHRAE 90.1 code minimum and code minimum with a water side economizer) were used to evaluate the total power required. The data shows a maximum total energy savings of 1.5 percent between from the code minimum plant and the plant with the water side economizer. This occurred at a chilled water temperature of 60F (15.5°C).

The key power use component was the power needed to make the chilled water. The power needed to make the chilled water averaged 4 times the power required for all other cooling power related components combined (device, CDU and pump power). The total power required for cooling can be reduced 15-20 percent by raising the chilled water temperature from 49F (9.4°C) to 54F (12.2°C)

All devices tested were close in energy efficiency performance considering the total power required including the computer equipment power and the power needed to provide the cooling. The energy efficiency for refrigerant devices can be maximized by carefully matching

the server heat load to the capability of the refrigerant to water CDU. The largest consumer of power per the amount of IT power cooled is the power needed to make the chilled water. Small increases in the chilled water supply set point can provide large energy savings. Depending upon system design, the chilled water distribution pump power is not a large component of overall energy efficiency but savings can be easily achieved if the supplied water supply delta pressure is reduced to the lowest required level. Chiller plant efficiencies vary considerably and this should be considered when reviewing the results of this study.

Some devices containing fans may benefit from a review and modification of the design of fan speed control to reduce unnecessary air flow at high server inlet temperatures. For water cooled devices, a water-to-water CDU may not be needed to control condensation if higher temperature chilled water is used.

CHAPTER 1: Introduction

In recent years, a number of new approaches to cooling IT equipment in data centers or as a replacement for traditional data centers have been introduced. Many of these new designs promise improved energy efficiency compared to conventional methods such as raised floor plenum cold air delivery combined with computer room air handlers. This project_s goals were to evaluate a number of currently available designs. The researchers collaborated with eight companies and obtained rack cooling equipment used for the tests.

The project developed energy metrics and used these metrics to evaluate test data comparing energy efficiency for rack coolers, row coolers, rear door coolers (refrigerant and water-cooled), direct touch cooling (Dtc), and a cooling solution as part of a modular datacenter. The evaluation results of the Dtc device have been published in another report Demonstration of Alternative Cooling for Rack-Mounted Computer Equipment prepared for the California Energy Commission but are included in this report as a comparison to the eleven other devices.

Rack Cooler

This device type provides an enclosure system for a small number of racks, typically one or two, and blocks hot server exhaust air from entering the computer room. This device contains heat exchangers that cool the re-circulated air, returning the cool air back to the server air inlet area. This device type contains fans or blowers that provide the flow needed to overcome the pressure drop across the heat exchanger Companies providing samples of this device type for testing were Rittal (LCP+), Knürr (CoolLoop, CoolTherm), and APC (InRow RC with RACS). Figure 1-1 describes the thermal schematic for these devices.

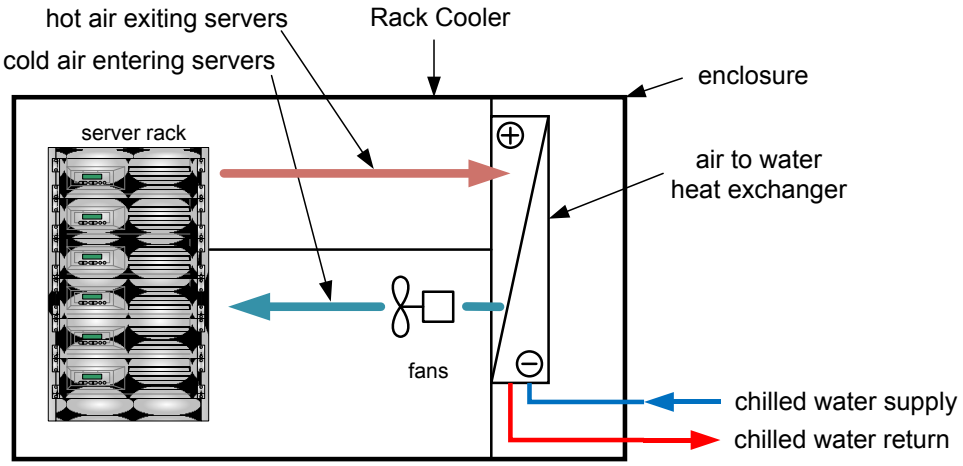

Figure 1-1: Rack Cooler Thermal Schematic

Source: Author

Row Cooler

This device type is placed directly adjacent to computer racks either horizontally or above the racks. It gathers hot exhaust air from the area near the rear of the rack, cools the air using an air to water, or air to refrigerant heat exchanger, and deposits the cooled air near the server air inlet area. In practice, this type of device may or may not come with additional containment structures that improve the separation and reduce mixing of hot and cold air streams. All devices of this type were tested using optional containment. Companies providing samples of this device type for testing were Liebert (XDH, XDV) and APC (InRow RC with HACS). Figure 1-2 describes the thermal schematic for these devices.

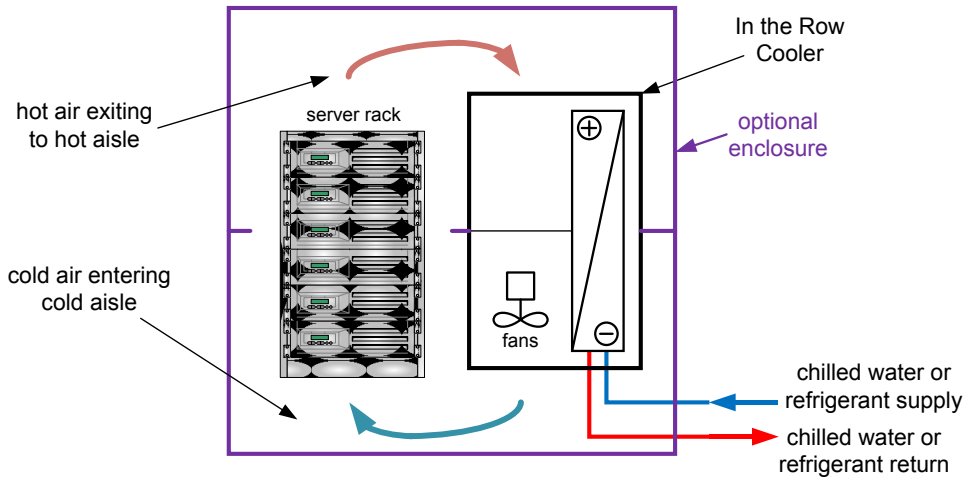

Figure 1-2: In-Row Cooler Thermal Schematic

Source: Author

Rear Door Cooler

This device type provides cooling of the hot air exiting the IT equipment rack via a heat exchanger in the place of a rack rear door and returns cooled air into the computer room. Air pressure needed to push the air through the heat exchanger comes from the server fans. This additional pressure, if above what would typically be found with a rack fitted with a rear door, did not appear to have a significant effect on the required server fan power, however measurements evaluating server back pressure, associated with passive rear door cooling devices, were not part of the testing. The average server power increase for 8 rack tests from 72°F (22.2°C) server air inlet to 80°F (26.6°C) server air inlet was 6.2%, see Appendix K. The tests of two different water based rear door devices showed very little change as a function of server air inlet temperature. The heat exchangers for this device type are air-to-water or air-to-refrigerant. Companies providing samples for testing were Vette (RDHX), IBM (Rear Door iDataPlex), SUN (SUN Glacier), and Liebert (XDR Passive Rear Door). Figure 1-3 describes the thermal schematic for these devices.

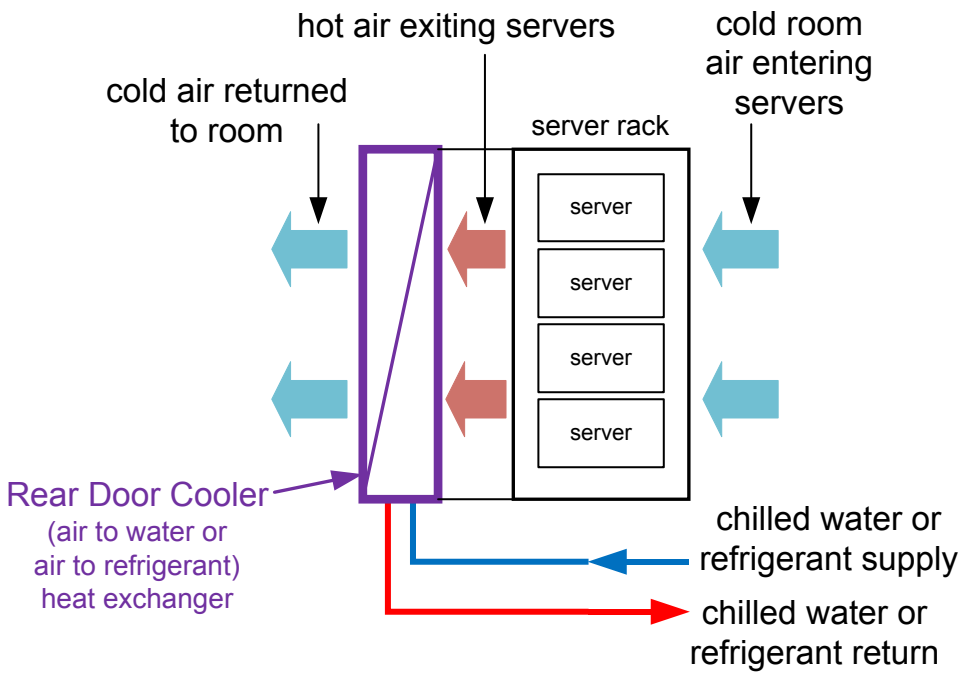

Figure 1-3: Rear Door Cooler Thermal Schematic

Source: Author

Direct Touch Cooling (Dtc)

A prototype device that cools hot electronic components located inside rack mounted IT equipment directly using conduction and refrigerant phase change was tested. See PIER Report-Demonstration of Alternative Cooling for Rack-Mounted Computer Equipment for details. This design is unique because it uses custom modified servers with server chassis level fans removed thereby providing reduced power consumption for a given amount of computing. The efficiency results for this design are included to highlight the overall energy efficiency of this unique system.

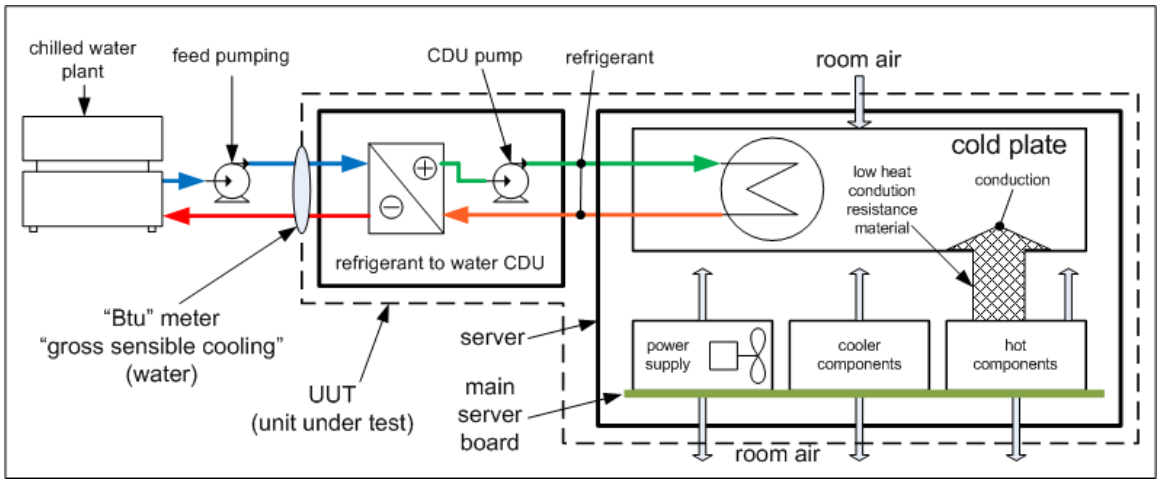

Figure 1-4: Direct Touch Cooling Thermal Schematic

Source: Author

Cooling Solution as Part of a Modular Datacenter

A container type modular datacenter was tested using the same models of servers as the other tests. The testing method and results for this device were different due to a change of location and metering equipment. Numerical results for this device were not completed due to unresolved metering anomalies. A test of the control system was completed. The results of this testing is discussed separately in the report. This device was supplied by Oracle (Previously SUN Microsystems) (SUN MD).

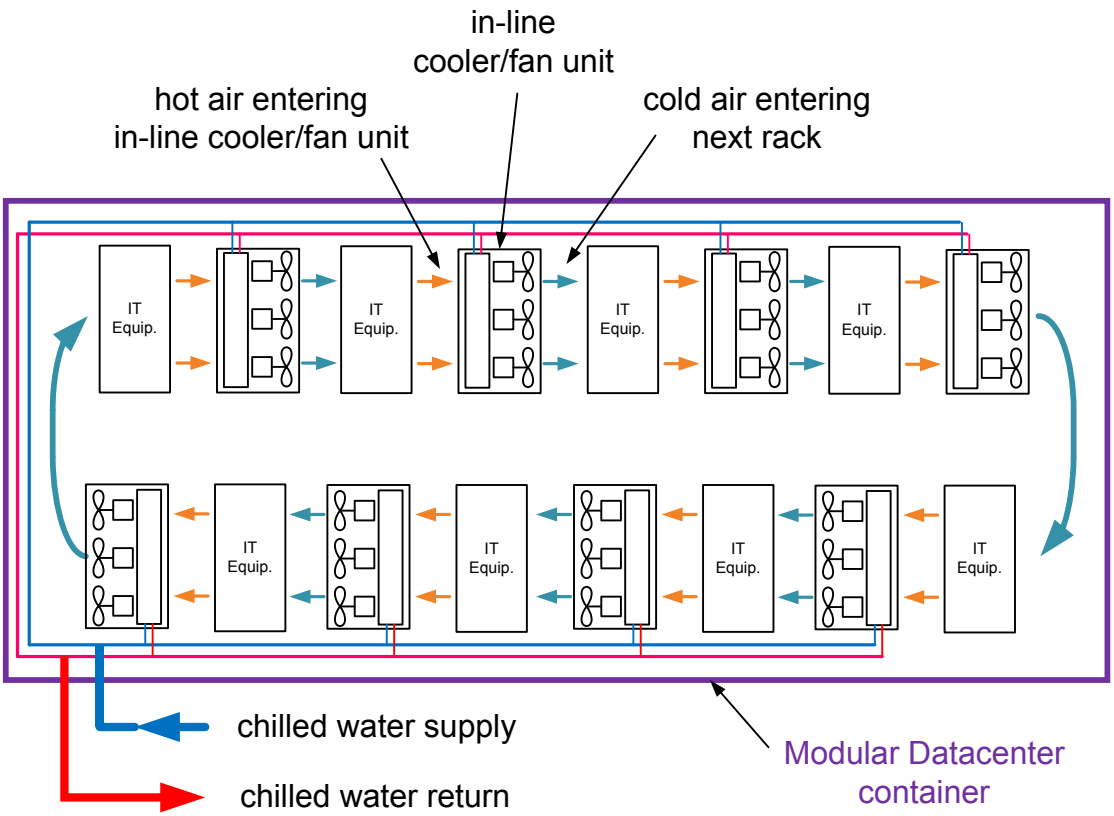

Figure 1-5: Modular Datacenter Thermal Schematic

Source: Author

Figure 1-6 displays the tested devices for each company participating.

Figure 1-6 Chill-Off 2 Tested Devices
Source: DataCenterPulse.org

CHAPTER 2:
Project Methods

Measurement Plan and Test Layout

This project‘ s goal was to evaluate cooling effectiveness and compare the energy efficiency of the devices tested. A series of tests using seven combinations of chilled water temperature and server air inlet temperature was planned, as shown in Table 2-1. This measurement plan was developed to see the energy implications of operating with higher temperature cooling water within the recommended and allowable ranges of temperature set by ASHRAE. Specific data collected is detailed below. The Industry research team encountered some difficulty reaching and controlling conditions for some tests numbers. Because of control limitations with the refrigerant-to-water heat exchange, test room temperature control, or other factors, not all devices were tested with all test combinations listed in Table 2-1. A number of assumptions and calculation methods were employed in an attempt to fairly compare devices in spite of measurement anomalies or undesirable test conditions.

Table 2-1: Target chilled water and server air inlet temperature combinations

Test ID #	UUT Chilled Water Supply Target Temperature (°F)	UUT Server Air Inlet Target Temperature (°F)
1	45	60
2	45	72
3	50	72
4	55	72
5	60	72
6	60	80
7	60	90

Source: Author

In addition to the variables listed in Table 2-1 some devices were tested using one rack filled with IT equipment and others were tested using eight racks of IT equipment. Table 2-2 lists the configuration of each of the 13 tests conducted.

Table 2-2: Cooling Device Identification and Test Details

Manufacturer Model (Chart ID Code)	Cooling Device Type	No. of IT Racks, Servers	Containment Type and Other Information
Knürr CoolTherm (Rkw-3)	Rack Cooler Water Only	1 Rack 40xSUN Servers	Full Enclosure
Knürr CoolLoop (Rkw-1)	Rack Cooler Water Only	1 Rack 40xSUN Servers	Full Enclosure
Rittal LCP+ (Rkw-2)	Rack Cooler Water Only	1 Rack, SUN/ IBM Servers	Full Enclosure
Vette Coolcentric RDHX (Drw-2)	Rear Door Water Only Passive	1 Rack, SUN/ IBM Servers	Rear Door Heat Exchanger
APC InRow RC with RACS (Rkw-4)	Rack Cooler Water Only	1 Rack, SUN/ IBM Servers	Full Enclosure
IBM iDataPlex (Drw-1)	Rear Door Water Only Passive	1 Rack, 84x IBM Servers	Rear Door Heat Exchanger
APC InRow RC with HACS (Irw1-1)	InRow Water Only	8 Racks, SUN/ IBM Servers	Hot Aisle Enclosure Non-Redundant Configuration
APC InRow RC with HACS (Irw1-2)	InRow Water Only	8 Racks, SUN/ IBM Servers	Hot Aisle Enclosure Redundant Configuration
Clustered Systems (Dtc)	Direct Touch Cooling Rack Refrigerant/ Water Passive	1 Rack, 36xSUN Servers*	No Enclosure Needed (direct cooling)
Liebert XDV/ XDH (Irr-1)	In the Row XDV/ XDH Refrigerant/ Water	8 Racks, SUN/ IBM Servers	Cold Aisle Enclosure
Liebert Rear Door (Drr-1)	Rear Door Refrigerant/ Water Passive	8 Racks, SUN/ IBM Servers	Rear Door Heat Exchanger
SUN Glacier Door (Drr-2)	Rear Door Refrigerant/ Water Passive	1 Rack, SUN/ IBM Servers	Rear Door Heat Exchanger
SUN MD	Modular Datacenter Water Only	7 Racks, SUN/ IBM Servers	Container Enclosure

*Servers were modified: chassis-level fans removed and heat conduction system installed.

Cooling device types listed as ―Passive" don' t contain fans. Two tests were completed using a row cooling device and 8 racks of IT equipment. The test setup was fitted with twice the number of row cooling units as would be needed in a typical non-redundant installation. The two tests are described as follows:

1-Not Redundant: During this test half of the row cooling units were turned off and air flow blocked. This situation required that the remaining units provide all the cooling and air flow needed. In this case the fans in each unit were running close to maximum speed as needed to keep up with the air flow from all the servers mounted in the eight racks.

2-Redundant: During this test all of the row cooling units were operational. This configuration allowed the row cooling units to provide the cooling and air flow needed for the eight racks of computer equipment using a lower average fan speed.

Apart from the modular data center, the tests were done in a specially prepared, semi-sealed room. Figure 2-1 shows the room layout and component locations typical for single rack tests. A refrigerant type device is shown as an example in Figure 2-1.

Figure 2-1: Typical Layout for Single Rack Test

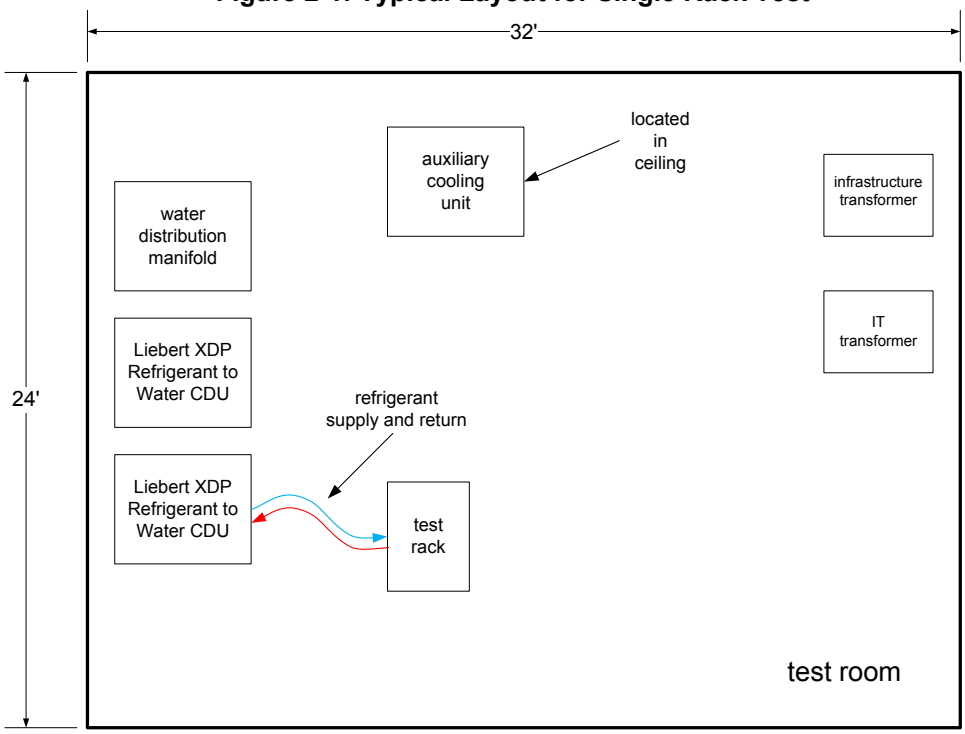

(Device requiring a refrigerant to water CDU shown as an Example)

Source: Author

Figure 2-2 shows the room layout, component locations, and approximate dimensions for typical row cooling device testing. During these tests the number of active cooling units was adjusted to keep the air flow balanced with the server needs.

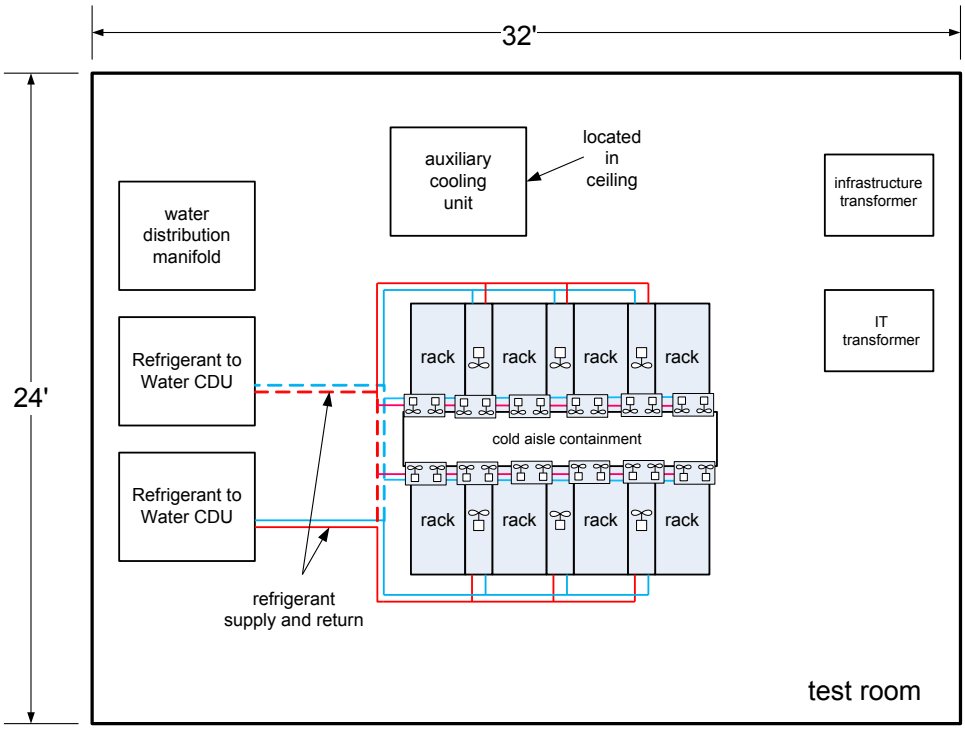

Figure 2-2: Typical Layout for Eight-Rack Test (Refrigerant In-row type device shown as an Example

Source: Author

The data was recorded approximately every 30 seconds during each four-hour test, and the collected data was averaged, using one-minute intervals to obtain an average per test value for each monitored data point.

Assumptions and Definitions

The following three diagrams show the basic components considered part of the unit under test (UUT) for the designs compared.

Rack, Row, and Rear-Door Devices (Water-Cooled)

Figure 2-3 shows the basic component definitions and UUT thermal analysis boundary for the devices using only water as a final cooling medium. Note that some devices tested have fans and some do not. For example, a device described as a *water-cooled passive rear door* does not contain fans or other power-consuming components.

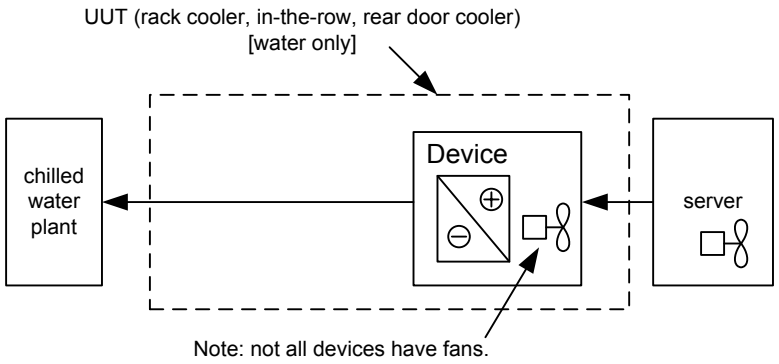

Figure 2-3: UUT definition for Water-Cooled Rack, Row, and Rear-Door Devices
Source: Author

Refrigerant Rear Door and Row Devices

Figure 2-4 shows the basic component definitions and UUT thermal analysis boundary for the devices using refrigerant as a cooling medium. .

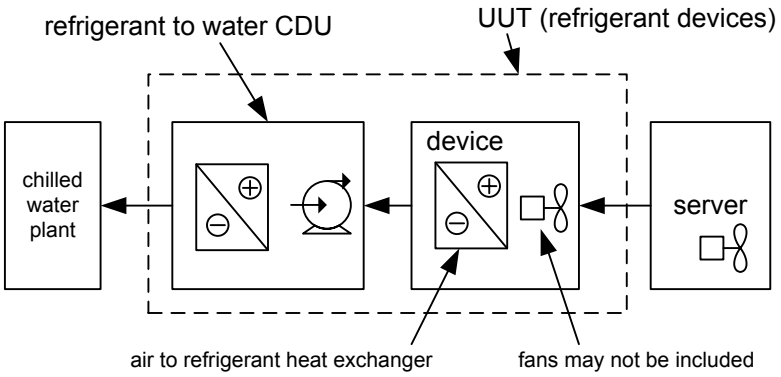

Figure 2-4: UUT definition for Refrigerant Devices

Source: Author

Direct Touch Cooling Device

Figure 2-5 shows the component definitions and UUT thermal analysis boundary (the dotted line) for the direct touch cooling rack. Note that the refrigerant-to-water cooling distribution unit (CDU) is considered part of the solution, and the servers do not contain the standard server chassis-level fans. The boundary of the UUT is shown as including a small part of the server this indicates that part of the heat transfer system is inside the server sheet metal chassis.

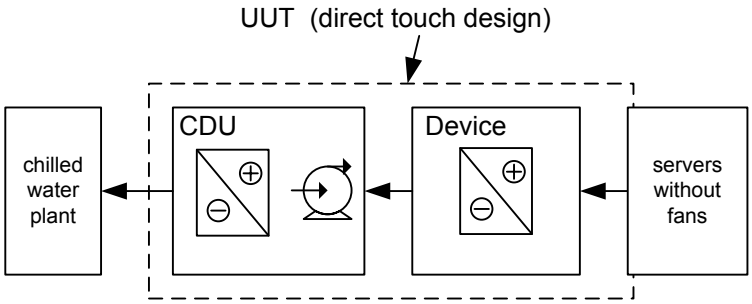

Figure 2-5: UUT definition diagram for Direct Touch Cooling Device

Source: Author

Modular Datacenter Device

Figure 2-6 shows the basic component definitions and UUT thermal analysis boundary for the modular datacenter type device. Unfortunately a complete analysis of the modular datacenter was not completed.

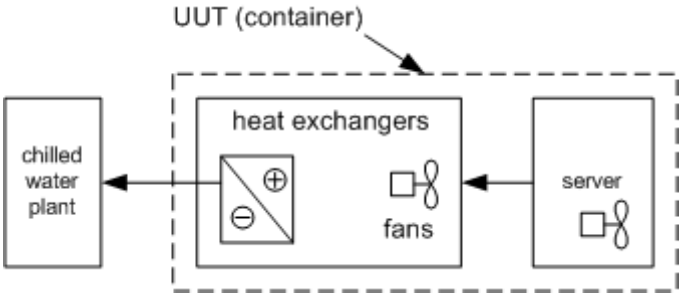

Figure 2-6: UUT Definition for Modular Datacenter

Source: Author

Assumptions for the Energy Use Comparison Calculations

The following assumptions were made for this project:

- **Feed pump power is absorbed in the UUT and water flow.** The feed pump power, including hydraulic, motor and pump inefficiencies, is released in the UUT and is then re-absorbed in the water flow. This assumption accounts for the total electrical power needed for chilled water pump power and reduces the net cooling available relative to the thermal power measured using the water flow rate and water delta temperature. This power is referred to as *Feed, Feed Power, or Feed Pump Power*.

- **The refrigerant-to-water CDU prorating factor is the server power divided by 160 kW.** The water-to-refrigerant CDU used in the testing has a 160 kW cooling capacity—well above what was needed for some tests. The refrigerant pump power was constant (approximately 821 watts) and could not be reduced in speed or power to match the low flow desired for best energy efficiency for some tests. Therefore the assumption made was that the CDU power would be prorated using the multiplier of server heat divided by 0.75 over 160 kW, as if an actual installation used 75 percent of the CDU‘ s maximum performance. The 75 percent value, also called the deployment factor is somewhat arbitrary. The refrigerant-to-water CDU pump power is constant and would likely be deployed when cooling for maximum server power is required. Anecdotally it is common to overestimate the actual maximum server power and also the server power, in many cases, varies over time. These two factors were used to arrive at the 75 percent deployment value. A check of test #6 for a refrigerant door indicates a change of deployment factor from 0.75 to 0.85 produced a calculated total energy savings of 0.071%. The effects of this assumption were not fully characterized and could be an area for further research. The chilled water flow rate for the refrigerant-to-water CDU used the same prorating calculation approach but does not include the deployment factor because the CDU has a modulating valve for the chilled water supply.

- **Water cooled devices are commonly installed with a water to water CDU.** The actual tests did not include a water-to-water CDU separating the building chilled water supply from the cold water supplied to devices using only water as a cooling fluid. In actual commercial installations a water-to-water CDU is commonly included for a number of reasons 1) separate water temperature control for condensation management 2) provides reduced leak risk for the building chilled water system by reducing the number of connections and 3) allows separate water quality treatment. The efficiency analysis includes the results for water only devices with and without a water-to-water CDU. The prorated electrical power for the water-to-water CDU is fully absorbed by the cooling device. The prorated value of the water-to-water CDU power was estimated using a CDU with a specification of supporting 100kW of server power using 1.25kW of pump power for 75 gallons per minute of water on both sides of the water-to-water CDU heat exchanger.

- **The prorated CDU pump power is absorbed in the CDU and refrigerant flow.** The prorated electrical power for the CDU is fully absorbed in the refrigerant flow. During the testing the refrigerant-to-water CDU pump power was a constant. A simplifying

assumption is that the difference between the actual test CDU power and prorated power is lost to the room and not part of the calculation of net cooling. This pump power value is referred to as *CDU power*.

- **The device power is part of calculating the net cooling.** If the device has fans or other electrical powered components, this power is referred to as the *device power* and is subtracted from the Btu meter value as part of calculating the net cooling provided. The assumption for this additional subtraction is that 100 percent of the device power will be absorbed in the water or refrigerant flows, thereby increasing the water or refrigerant delta temperature, thereby reducing the cooling provided.

Test Quality Indicators

Two calculations were used to check for large amounts of unaccounted-for heat energy that could indicate measurement errors or outside influences that might significantly affect the final results: (1) calculating the test room net power balance, and (2) comparing the net cooling provided to the server power.

1. Test Room Net Power Balance

The room power balance, also called *heat balance*, was calculated by subtracting the thermal power removed by the two water cooling methods in the room (the UUT (when present), and the ceiling-mounted fan cooling unit) from the sum of the server electrical power and infrastructure electrical power measured at the inputs to the two large transformer inside the test room. The electrical power for the server and infrastructure was metered and recorded, and it accounted for the major power inputs to the test room. When the test room thermal power balance was +/ -10 percent or better, or the device being tested was close-coupled with the heat from the server rack(s), it was assumed that data collected was valid unless the recorded key test parameters listed in Table 2-1 were not close to the target values. Appendix D lists this calculation, percent room heat lost, for each test.

A few observations were noted:

- There was a noticeable air flow coming under the test room entry door from the adjacent employee office areas. There was no attempt to directly measure this heat loss or gain, or to otherwise characterize the heat flow magnitude relative to the other power measurements during a test, other than calculating the net room heat loss or gain. The room power balance calculation should be affected more for one-rack tests than for eight-rack tests.

- During the tests it was noted that the ceiling-mounted fan-coil unit return water temperature was lower than the supply temperature in many cases even though the ceiling fan unit was being controlled to supply no cooling. The fan-coil unit was controlled by a three-way valve, therefore the water temperature should rise very slightly or be equal (supply relative to the return temperature) when the fan-coil unit control calls for no cooling.

Given that there were no other objects or an environment nearby colder than the building chilled water supply temperature (normally 44°F [6.6°C]–46°F [7.7°C]), an investigation was conducted to find the root cause of this reading anomaly. After the testing was done, inspection of a contact-type water pipe temperature sensor was found to be not well connected. Additional review of past data indicated that the reading error was approximately 0.3°F (0.17°C) in many cases, resulting in a power accounting error of approximately 550 watts. Because the cooling provided by the ceiling fan unit is not directly part of the net cooling calculation, this error did not affect the metrics calculation, but it did affect the room energy balance.

- The infrastructure transformer supply power to the devices, CDU, and room recirculation pump had power monitoring on both the 480 volt (input) and 208 volt (output) sides. It was observed that in some cases the output power recorded was higher than the input power (efficiency gain), and in many cases there was a much larger than expected efficiency loss recorded. An investigation was undertaken to determine the cause of these anomalies. It was found that the current transformers installed were not sized per the metering device manufacturer recommendations. In an attempt to verify the power reading on the 208 volt side (output) of the transformer, different current transformers were obtained and used with the input power meter installed on the 208 volt side (output), to investigate the power reading quality on the output side. The results show that the 208 volt (output) side readings were accurate. This finding indicates that the anomaly is most likely associated with the meter readings on the 480 volt (input) side of the infrastructure transformer.

2. Compare Net Cooling Provided to the Server Power

For each test, the total server power was recorded and did not vary during the 4 hour test, except when high server air inlet temperatures caused over-heating and server shutdown. The net cooling provided (UUT bulk cooling minus cooling device power) was calculated. If the net cooling divided by the server power is above 100 percent, this indicates that more cooling than necessary is being provided and is not considered a concern. If less than 90 percent, the cooling device may not be capturing the amount of heat desired, or instrumentation errors are present. Resources were not available to find the source of anomalies and retest. Three different valuations for net cooling divided by server power are listed in the last three columns listed in Appendix D for each test. In all cases the comparison metrics use the net cooling provided as the basis for the calculations. An energy efficiency comparison metric, that resolves the problem of some devices over or under cooling relative to the server power, is introduced later in this chapter and used in the final result comparisons.

The recorded data and calculated results are presented for all tests that were successfully completed. In addition to the two quality indicators above, the tested server

air inlet temperature and chilled water temperature should be reviewed when making a performance comparison.

Data Recording

The following data points were continuously recorded for each test. The numbers correspond to the data points in Figure 2-9.

1. power going to the servers (e.g., 36 servers in the Clustered Systems rack test) (kW)
2. UUT chilled water supply temperature (°F)
3. UUT chilled water return temperature (°F)
4. UUT chilled water flow (gallons per minute, gpm)
5. auxiliary unit chilled water supply temperature (°F)
6. auxiliary unit chilled water return temperature (°F)
7. auxiliary unit chilled water flow (gpm)
8. power to auxiliary cooling unit (kW)
9. power to infrastructure (kW) [includes room recirculation pump (4) and UUT power]
10. power to infrastructure transformer (kW)
11. power to IT transformer (kW)
12. cpu0 and cpu1 temperatures – (°C) [both for each server]
13. power to secondary loop (room) circulation pump (kW)
14. server inlet air temperatures (SIAT) for each rack (°F) [18 points per rack]
15. server leaving air temperatures (SLAT) for each rack (°F) [18 points per rack]
16. room area temperatures (°F) [5 zones, 3 per zone]

Figure 2-7 shows the schematic locations for the above-listed data points. It also shows the layout for a refrigerant based cooling device.

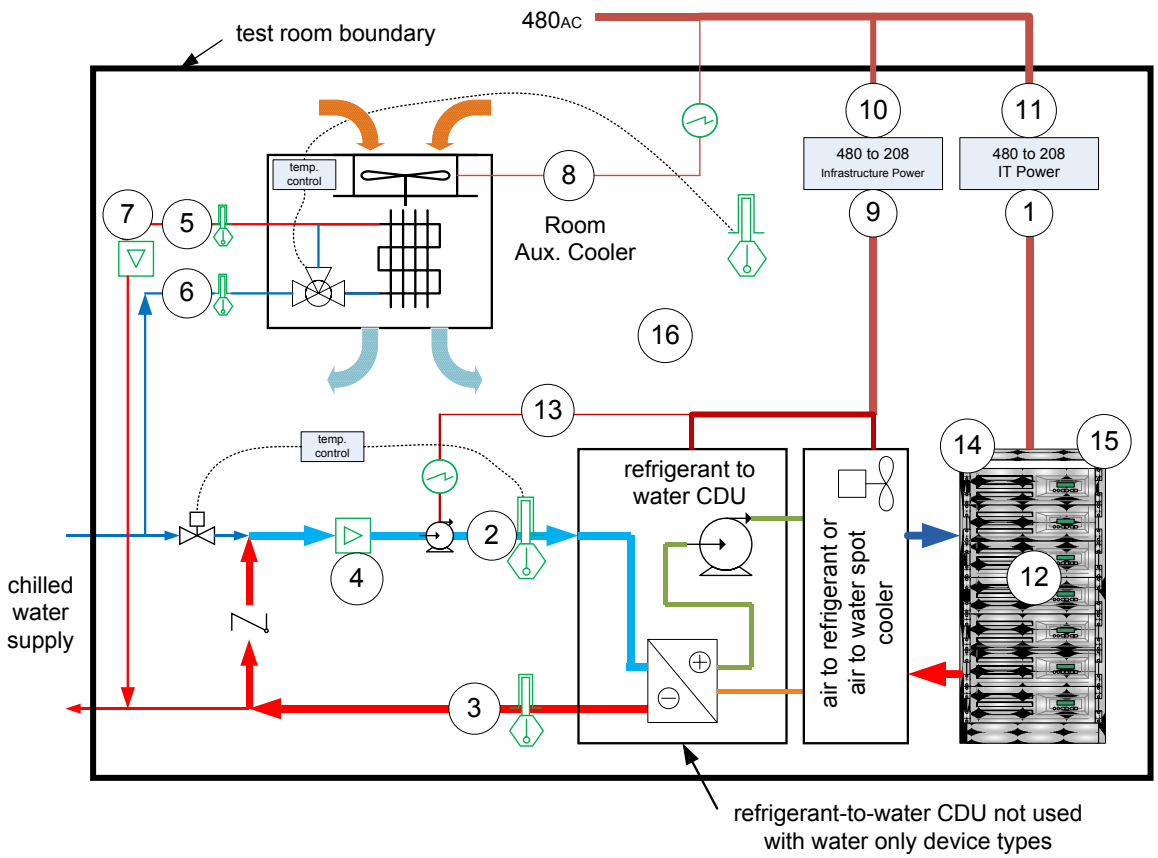

Figure 2-7: Schematic locations of the data points
Device Requiring a Refrigerant-to-Water CDU Shown as an Example

Source: Author

Not all of the recorded data were directly used in the final comparison calculations. For example, the temperatures in the room or at the server inlets where checked to see that they correspond to the test plan, but those data were not used to make thermal power calculations.

Description of Terms and Metrics Used to Compare Cooling Devices

Four energy-efficiency metrics were developed to evaluate and compare the cooling system types tested. The following paragraphs first define the terms used in the metrics and then present the metrics themselves.

Chilled Water Plant Power ("CWP")

Chilled Water Plant Power is the electrical power necessary (expressed in kW electrical) to process the chilled water. Two chilled water plant models were used. One was a based on an

American Society of Heating, Refrigerating and Air-Conditioning Engineers (ASHRAE) code minimum design, and one had a water-side economizer feature to evaluate advantages of higher chilled water supply temperatures. The two models did not include the pumping power to distribute the chilled water; only the power needed to cool the chilled water. Both models used a plant size of 600 tons of cooling and include averaging for yearly performance. The individual pump power needed for each test was accounted for using the pump calculation methods described below. See Appendix B for more chilled water plant model details.

A chart containing data plots is shown in Figure 2-8.

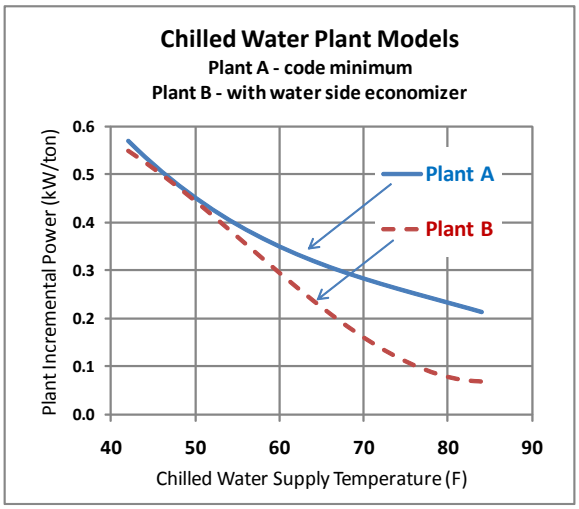

Figure 2-8: Chilled Water Plant Models (A and B) Electrical Power Required per Ton as a Function of Chilled Water Temperature
Source: Taylor Engineering

Feed Pump Power ("ASHRAE Feed")

The test setup contained a pump, often referred to as the *room pump* or *red pump,* used to recirculate the water, enabling temperature control of the secondary loop and at the same time providing pressure to feed the UUT. The pressure setting for the pump was changed, sometimes without good record keeping therefore the ASHRAE based (assigned delta pressure) Feed pumping power was used for analysis.

Feed pump power (expressed in kW electrical) is presented using two methods:

1. ASHRAE 90.1 Defined Feed Delta Pressure (ΔP) (ASHRAE Feed)

The ASHRAE 90.1 guidelines for chilled water plant design contain a defined pressure differential for chilled water distribution. This value is 75 feet of head, which corresponds to 32.4 pounds per square inch differential, (psid). A more efficient chilled water system may supply a lower delta pressure, saving energy. The ASHRAE code minimum model represents the worst energy performance permitted under the standard. The feed pump power for a particular device was calculated using the defined pressure differential and the actual or estimated water flow rate. In the case that a CDU is part of the UUT, the pump power is calculated using the primary side flow

rate for maximum CDU-supported server power load divided by the actual server power. This calculation provides a prorated feed or pump power. In the case where the UUT does not contain a CDU, the feed power is calculated using the defined **ΔP** and the water flow rate measured during the test.

Equation 2-1 defines the ASHRAE Feed Pump hydraulic power. The required motor electrical power is found by dividing the hydraulic power by 0.65 (the total pump efficiency ratio) to account for the combined pump and motor losses. The 0.65 value for total pump efficiency is obtained from the ASHRAE 90.1 Standard. Equation 2-2 is used to calculate the electrical power stream needed for the chilled water distribution pumps.

ASHRAE Feed Pump Power (kW hydraulic) = (UUT water flow rate (gpm) x ASHRAE delta pressure (32.4 psid) x 0.000435) (Eq. 2-1)

ASHRAE Feed Pump Power (kW pump electrical) = ASHRAE Feed Pump Power (kW hydraulic) / 0.65 (Eq. 2-2)

2. As-Tested Feed Pump Power

The room pump power is not used in pumping power calculations, but is listed in Appendix C under Red Pump Power. The measured room pump power is used because it is part of the necessary subtraction to determine the device power.

CDU Power ("CDU" or "CDU Prorated")

CDU power is expressed in kW electrical. The test room was equipped with two refrigerant-to-water type CDUs, each containing a refrigerant pump, available to provide cooling fluid to all refrigerant device used for comparison testing. The CDU design did not allow the reduction of pump power to match the required heat load; therefore, the measured CDU power was scaled or prorated. (See Eq. 2-3). A deployment factor of 0.75 was also used as part of the prorating. The CDU pump power was measured as a constant 821 watts per CDU. The analysis includes the case where a water-to-water CDU is added to water only type devices. In that case the CDU deployment factor is assumed to be one because water-to-water CDU equipment are typically designed with a pump speed control using a delta pressure signal. See equation (Eq. 2-3b) for the calculation for water-to-water CDU power.

CDU (refrigerant-to-water) Prorated (kW) =

0.821 kW x (((tested server power (kW) / deployment factor) / 160kW) (Eq. 2-3)

CDU (water-to-water) Prorated (kW) =

1.25kW x (((tested server power (kW) / deployment factor) / 100kW) (Eq. 2-3b)

Cooling Device Power ("Device")

The typical device may contain one or more fans or other electrical power-consuming components. Some designs have no fans or power-consuming components in the cooling

device, therefore the calculated results for some performance metrics use zero, or a very small value, listed as the device power. For the other devices, containing fans, used for comparison there was a significant device power level recorded during the tests. In those cases the power assigned to the cooling device is the power calculated by subtraction using the test room infrastructure 208 volt power reading and power measured for the room recirculation pump. Power use for the device is expressed in kW electrical. In most cases, where the device power should calculate to be zero, the subtraction to calculate the device power for passive devices did not equal zero. In these cases, it was assumed, the recorded value of the room pump was in error and an adjustment in the room pump power was applied such that the device power calculated was 1 watt. This avoided a division by zero for one of the comparison metrics and adjusted the data so that the device power was correct.

Unit Under Test Power ("UUT")

The UUT power (expressed as kW electrical) is the sum of the electrical consuming components of all equipment found inside the data center room necessary to support the cooling device. For example, in the case of the Other Refrigerant device, electrical power is needed for the refrigerant-to-water CDU and for the fans contained in each of the cooling modules located near the server racks are combined to calculate the UUT power. Both the CDU power and the fan power are combined to obtain the UUT power as described in Eq. 2-4.

UUT power (kW) = CDU Prorated power + Device power (Eq. 2-4)

Gross Sensible Capacity ("GSC")

The GSC, per the ASHRAE 127-2007 Standard, is the thermal power measured for example, using two temperature probes and a flow meter for a given UUT. This is sometimes referred to as a *Btu meter*. See Eq. 2-5 for determining the value of GSC. Note: The chilled water supply used for some tests contained a by-pass circuit, some water flow fed the UUT and the remaining flow was by-passed to the house chilled water system return. In those cases readings from two flow meters (1- overall flow and 2- specific flow through the UUT) were recorded. The GSC uses the overall flow rate and water delta temperatures. GSC is expressed in kW thermal.

GSC(kW) = water flow (gpm) x water delta temperature (F) x 0.1464 (Eq. 2-5)

Net Cooling Provided ("NC")

In the case of a device that uses a refrigerant-to-water heat exchanger, the best way to determine the cooling provided by the UUT is to find a method to directly measure the refrigerant fluid enthalpy difference of the flow to and from the cooling device. A direct method was not available, therefore an alternative method using collected data and calculation was used and follows the ASHRAE 127-2007 Standard for calculating net cooling. This method is also followed for a device cooled with water only.

The definition of *net cooling* provided for the comparisons is the power determined through use of the GSC thermal power minus the sum of the cooling device power, CDU power, and feed pump power. The actual net cooling provided may contain heat lost or gained from the room environment. For example, some tests showed that the UUT provided more or less net cooling than the server kW, this indicates that the UUT is providing more or less cooling respectively than necessary. The energy efficiency comparison metrics defined below use the net cooling provided.

Figures 2-9, 2-10 and 2-11 provide details for each device type tested and show the calculation of net cooling provided (NC_b type – Eq. 2-7), when the UUT and feed pump power are considered, in a graphical format. Note that the pressure data locations, indicated by circles with an X, were not test measurements; the delta pressure is defined from ASHRAE 90.1.

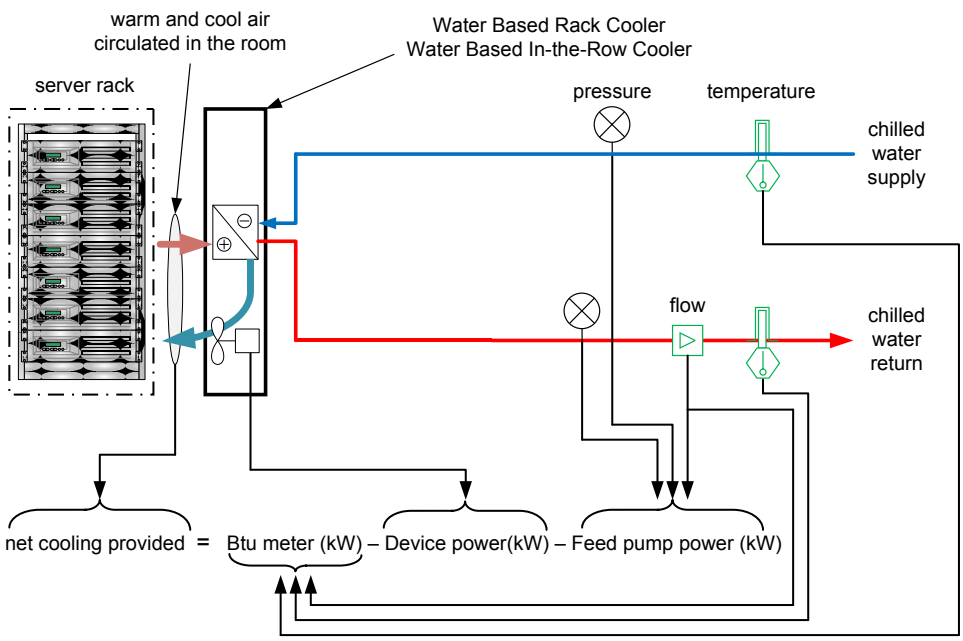

Figure 2-9: Net Cooling Provided – Water Only Cooling

Example Shown – Row Type Device

Source: Author

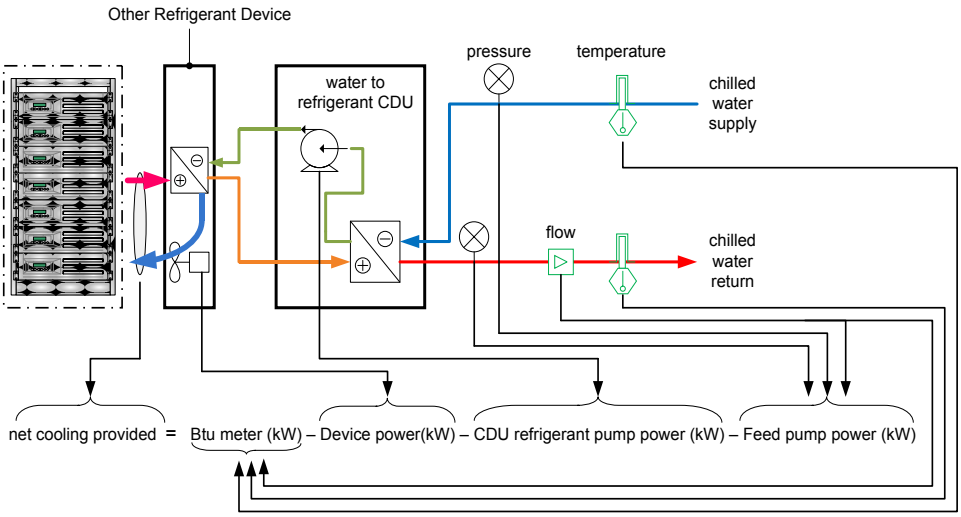

Figure 2-10: Net Cooling Provided – Refrigerant to Water Cooling Example Shown – Row Type Refrigerant Based Device

Source: Author

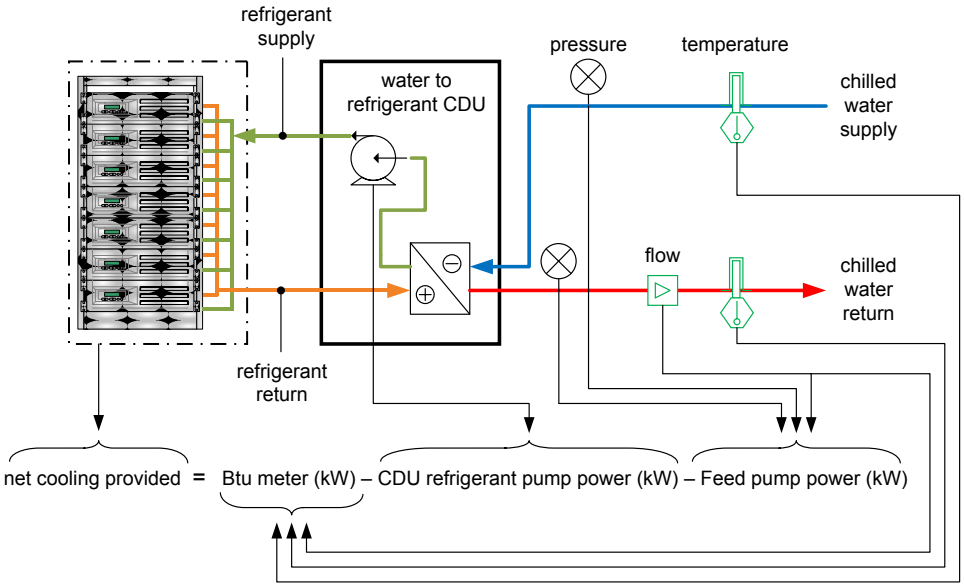

Figure 2-11: Net Cooling Provided – Direct Touch Cooling

Source: Author

Not all of the power (expressed in units of kW thermal) recorded as GSC for the UUT is available to provide cooling for the IT heat being removed. The net cooling provided is the cooling power remaining after the local power consumption and flow friction is subtracted. Two different calculations for net cooling are provided. See the discussion and definition of net cooling provided above. Equations 2-6 and 2-7 define NC_a and NC_b, respectively that are used in the following energy efficiency performance comparison metric calculations.

$$NC_a = GSC_{UUT} - \text{UUT power} \quad \text{(Eq. 2-6)}$$

$$NC_b = GSC_{UUT} - \text{UUT power} - \text{ASHRAE Feed} \quad \text{(Eq. 2-7)}$$

Server Power – ("IT")

Fortunately, the test room was equipped with a transformer powering all servers used as part of a test and no other loads were on the transformer. The transformer had power meters on the input (480 volt ac) side and the output (208 volt ac) side supplying power to the servers, providing good data on the combined true power used by the servers or ―IT." This power (*server power, IT power*) is expressed as kW electrical. The power lost from cables going from the transformer output to the power distribution units (PDUs) on the server racks and from the actual power cords was assumed to be zero.

Figure 2-12 illustrates the makeup of each electrical or thermal power stream defined above.

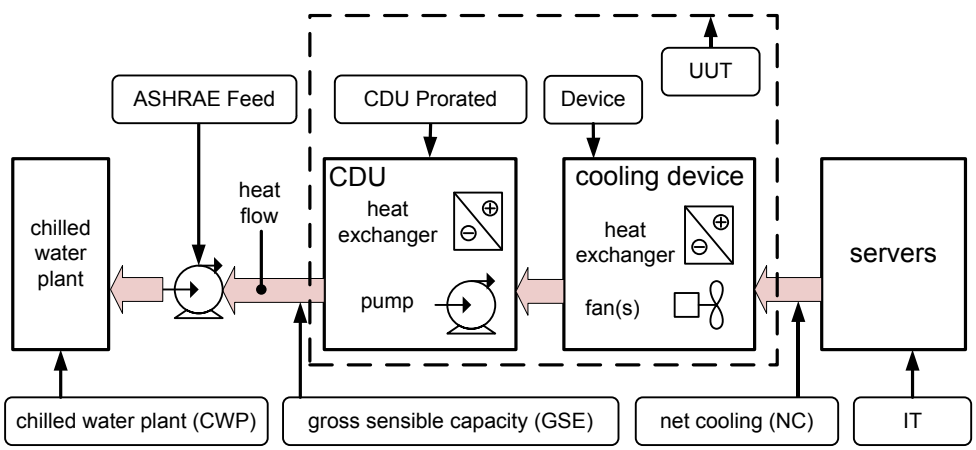

Figure 2-12: Electrical and Thermal Power Streams

Source: Author

Comparison Metrics

The following six metrics were used to compare cooling devices. The definitions of sensible coefficient of performance (SCOP)-type metrics for this report are guided by the ASHRAE 127-2007 Standard. All SCOP metrics defined below have units of kW thermal divided by kW electrical. The air-conditioners covered by the ASHRAE 127 standard include equipment that use chilled water to cool warm air generated by computer equipment. For example, a computer room air handler (CRAH) can be evaluated using the ASHRAE 127 Standard. Although some of the devices described in this report use a different layout and configuration compared to a typical computer room air handler, since all use chilled water for cooling inside the data center, the analysis follows the ASHRAE 127 evaluation approach.

Metric 1: $SCOP_a$

SCOPa is the electrical power needed for the device and nearby required supporting equipment. A metric described as kilowatt per ton, not presented in this report, can be calculated using the reciprocal of SCOPa x 3.516 kW thermal / ton.

$$SCOP_a = NC_a \,/\, \text{UUT power} \qquad \text{(Eq. 2-8)}$$

Metric 2: SCOPb

SCOPb adds the feed pumping power to SCOPa.

$$SCOP_b = NC_b \,/\, (\text{UUT power} + \text{Feed power}) \qquad \text{(Eq. 2-9)}$$

Metric 3: SCOPc

SCOPc is the same as SCOPb but adds the power needed to produce the chilled water using the models referred to in Fig. 2-8. NCb is used because the chilled water plant power is assumed to be dissipated outside the data center room and doesn‘ t directly affect the net cooling provided.

$$SCOP_c = NC_b \,/\, (\text{UUT power} + \text{Feed power} + \text{CWP}) \qquad \text{(Eq. 2-10)}$$

Metric 4: Chill-0ff 2 Energy Efficiency (“COEE”)

COP type metrics cannot be easily used to compare total energy differences, therefore the COEE metric is provided. The COEE metric is very similar in concept to the widely accepted power usage effectiveness (PUE) metric. The definition for COEE is total energy used, including the UUT power, pumping power, chilled water plant power and IT power, divided by IT power (Eq. 2-11). This metric does not include power components commonly included in PUE evaluations, such as lighting, UPS systems, or distribution losses from the utility connection to the data center computer room. This result can be used to estimate cooling related energy needs as a function of server power. For example: if COEE = 1.5 and the server power is 400 watts,

then approximately 600 watts will be needed to operate and cool the server. Lower values are more energy efficient. For processes commonly considered, the lower limit value for this metric is unity. The value of COEE is unitless or can be thought of as kW electrical / kW electrical because all power streams defined in the equation are electrical.

COEE = (CWP + UUT power + Feed power + IT power) / IT power (Eq. 2-11)

The direct touch cooling design has the fans removed and therefore provides the same compute results using less server power. Since the COEE metric contains the server power and the Dtc design provides more compute per a given amount of server power an adjusted COEE is need for the Dtc (COEEdt) results to provide a fair comparison.

The adjusted Dtc COEE (COEEdt) calculation method is shown using Eq. 2-11a and Eq. 2-11b.

First the normalized server power is calculated using Eq. 2-11a:

Normalized Server Power = tested Dtc server power / (1- percent server power saved using the Dtc designed server) (Eq. 2-11a)

Second, the adjusted COEEdt is calculated using Eq. 2-11b:

COEEdt = (tested Dtc Server power x tested Dtc COEE) / Normalized Server Power (Eq. 2-11b)

COEEdt values may be below unity when compared to other devices that have low COEE values just above unity.

Note: COEE is directly related to SCOPc by Eq. 2-11d when the net cooling is equal to the IT power. See Appendix G for derivation and a graph relating SCOPc to COEEc and total energy savings. The term COEEc is introduced in Eq. 2-11d. COEEc is used to estimate the COEE metric value when the net cooling equals the IT power. COEEc compensates for test conditions or settings that controlled the cooling device to over or under cool relative to the IT power. COEEc is used as the primary metric for comparison of total energy efficiency because COEEc values can be easily compared to obtain total energy saving percentage differences and this metric compensates, as mentioned above, for unintended test conditions where the net cooling did not closely match the server power. Graphs of COEE are not included in the appendix to avoid inadvertent use as comparison information; COEEc should be used for overall efficiency comparison as mentioned above.

COEEc = (1 / SCOPc) + 1 (Eq. 2-11d)

CHAPTER 3:
Project Results

For each metric, the calculated comparison results for the 77 tests are presented first grouped by manufacturer and model sorted by test ID# and then presented from highest to lowest energy efficiency performance. The x-axis chart labels indicate the test ID# and device type. The first number is the test ID# (1-7) referring to table 2-1. The next two letters indicate the generic device type; Rk=rack, Ir = Row, Dr = door. The next letter indicates if the device is refrigerant or water cooled indicated by ―r" and ―w" respectively. The next character is a random number assigned to a given device type. See table 2-2 for the translation to manufacturer and model number. Some tests are identified with a final dash followed by a number, this indicates the test used the same equipment set but, for example half of the devices were blocked to test a non-redundant configuration.

Performance calculations were completed to estimate the energy efficiency performance for a conventional data center cooling approach using computer room air handlers (CRAHs). Performance information, representing a typical CRAH, was obtained from a CRAH device manufacturer. The results indicate the tested devices are more energy efficient than conventional data center cooling design using under floor cold air supply and computer room air handlers. See Appendix A for CRAH performance information and performance metric results.

Note: Device Irw-1 uses the same equipment and test layout but is tested in two configurations. In one configuration ―Irw-1-1" half of the devices are disconnected and air flow blocked-off simulating one half of the devices are not installed. The other configuration ―Irw-1-2" uses all devices as would be used in a redundant configuration. *The results for the modular data center are not listed in the result charts.

The raw data is listed in Appendix C. Calculated data is listed in Appendix E and F. Calculations of room power balance and cooling provided relative to server power are listed in Appendix D.

Comparison Calculation Information

The bullets below summarize important calculation assumptions and other details.

- **The recorded room re-circulation feed pump power was not used in the comparison metrics.** During the tests the delta pressure setting for the pump was changed and not always documented, therefore the presented results use Feed pump power calculated using the ASHRAE 90.1 guidelines and tested UUT water flow rate.

- **The actual CDU power measured during the tests is not used in the comparison metrics.** As mentioned in Chapter 2 the performance metrics are calculated assuming the CDU equipment manufacturer listed maximum performance is fully utilized for a water-to-water CDU. The utilization for a refrigerant-to-water CDU is reduced by a deployment factor as described above under Assumptions for energy Use Comparison

Calculations. The CDU power is prorated using the value of server power divided by the maximum manufacturer listed cooling performance.

- **Calculated device power values do not match the calculation using the raw data.** Some small values for device power are listed for some tests when the device power is expected to be zero, for example if the device is a passive rear door. These values arise from a combination of electrical power measurement methods and subtraction to calculate the cooling device power. If all the measurements were 100% correct, the device power for the passive devices would be zero. Since the device power is known to be zero, in some cases, the recorded room pump power was adjusted to give a device power of one watt. Adjusting the device power, in this manner, to one watt prevented the SCOPa metric from being reported as undefined allowing for more convenient plotting.

- **In typical installations, devices that use only water are very likely to have a water-to-water CDU between the building chilled water system and the IT equipment cooling device water circuit**. With a water-to-water CDU installed a significant additional quantity of power will be added to the resulting energy efficiency metric calculations. If a water only device type is being considered it is strongly suggested that calculations including the water-to-water CDU power be completed and used in any comparisons appropriate. Since a water-to-water CDU is commonly installed, the results contain this option. If the reader doesn‘ t agree that a water-to-water CDU is commonly used the reader is free to ignore those results.

- **The COEE comparison results listed for the Direct Touch Cooling device do not fairly account for the total energy used by the servers and power needed for cooling if a modified IT equipment power number is not used.** COEE is a ratio that is used to estimate the total power needed as a function of IT equipment power. If the IT equipment power is reduced, as is the case with the Direct Touch Cooling Solution, then an estimate needs to use this lower power number to predict the total power needed. The results of this type of calculation can be used to fairly compare the Direct Touch Cooling device to other device types. The metric COEEdt is introduced and used to make the COEE adjustments for the direct touch cooling device.

- **The recorded data such as chilled water supply temperature or server air inlet temperature may be a significantly high or low compared to the target test parameters.** Results, using data from this sort of testing error, are <u>not</u> removed from the results, it is strongly suggested that the data quality, for a particular the test of interest, be reviewed before conclusions are made. For example, one test recorded a server air inlet temperature of 116°F (47°C).

$SCOP_a$ Results

The three charts in Figure 3-1 contain the SCOPa comparison results for the devices and configurations tested for the case where no water-to-water CDU is added. For an explanation of high values for the SCOPa metric refer to the discussion on residual device power used in the SCOPa metric in the Comparison Calculation Method section above. The SCOPa metric is useful if the power needed in the data center room is of primary interest. The results show that devices not containing power consuming components, for example rear doors and other passive devices, have high SCOPa performance. For the water cooled devices that don‘ t contain fans or a water to water CDU the SCOPa value is undefined because the denominator of the SCOPa definition is zero. In those cases a pseudo fan power of approximately one watt was used and the resulting charted SCOPa value is shown. Clearly device types that have no device-level power-consuming components and little or no CDU power perform very well using the SCOPa metric.

If the reader is interested in a metric described as kW electrical needed in the data center divided by tons of cooling, the reciprocal of SCOPa multiplied by 3.516 kW/ ton can be used to calculate a kW/ ton value. Appendix M contains these values for the case of a water-to-water CDU not added.

The water to water CDU power is calculated and prorated using 1.25kW of pump motor power being able to cool 100kW of server power. This ratio is 0.0125kW/ kW CDU pump power for each kW of server power.

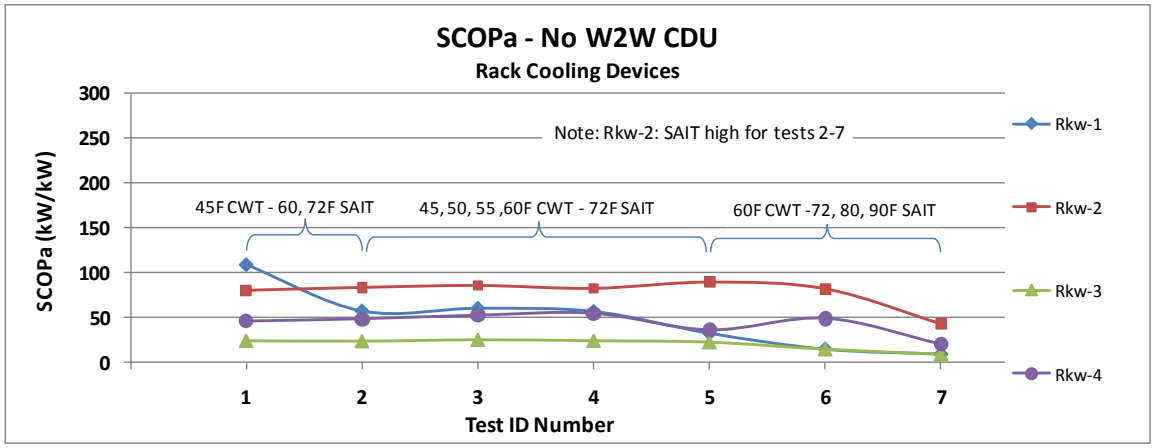

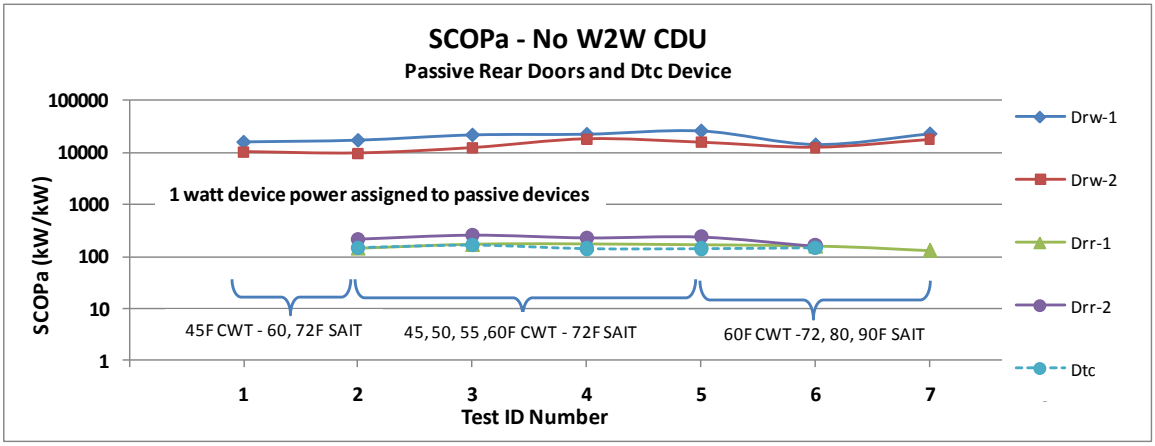

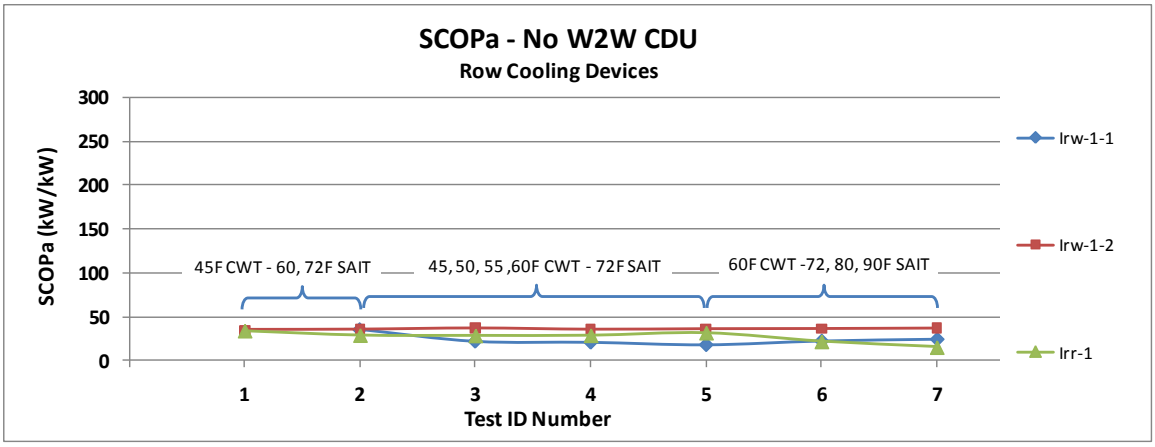

Figure 3-1: Chill-Off 2 $SCOP_a$ Performance
Water to Water CDU Not Added

Source: Author

$SCOP_b$ Results

Figure 3-2 shows the results for SCOPb for the devices and configurations tested for the case where a water-to-water CDU was not added. Because the feed pumping power is added reducing the net cooling provided along with increasing the SCOPb denominator value, the SCOPb results are generally much lower than the SCOPa results. The SCOPb results are useful if the feed pumping power is considered important in the analysis or selection of cooling equipment. The calculation of feed pumping power used in Fig. 3-2 are the as tested water flow rate for the water cooled devices. The feed pumping power for the water cooled devices ranged from 0.0149kW per kW of server power to 0.0163 kW per kW of server power. The difference relates to the capacity difference between a water-to-water CDU and a refrigerant to water CDU.

The rear door and other passive devices generally do well with the SCOPb metric but the distinction is much less, compared to the SCOPa metric, because all devices need the chilled water and the associated feed pumping power.

See appendix I for the SCOPb results when a water-to-water CDU is added. When the water-to-water CDU is added the water cooled devices have a constant pumping power of 0.016 kW per kW of server power.

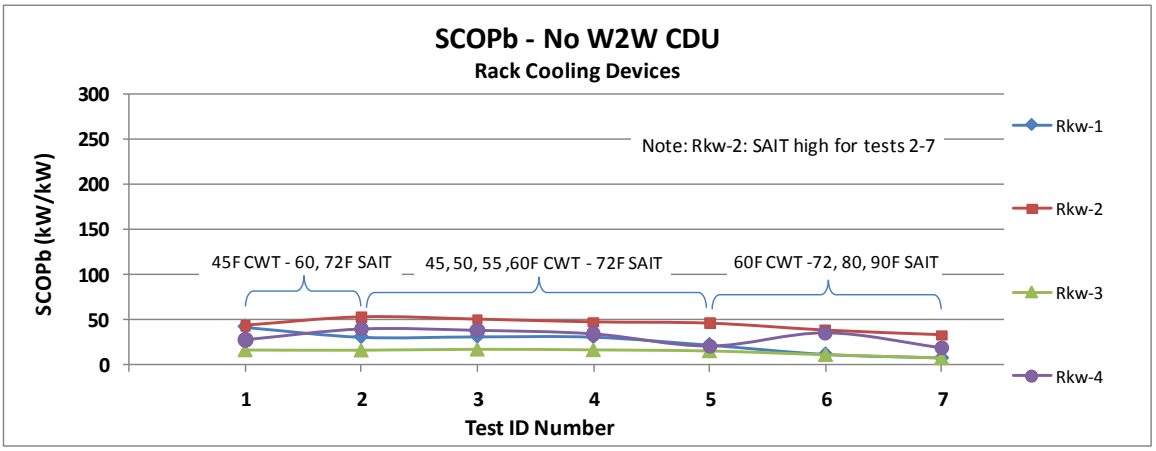

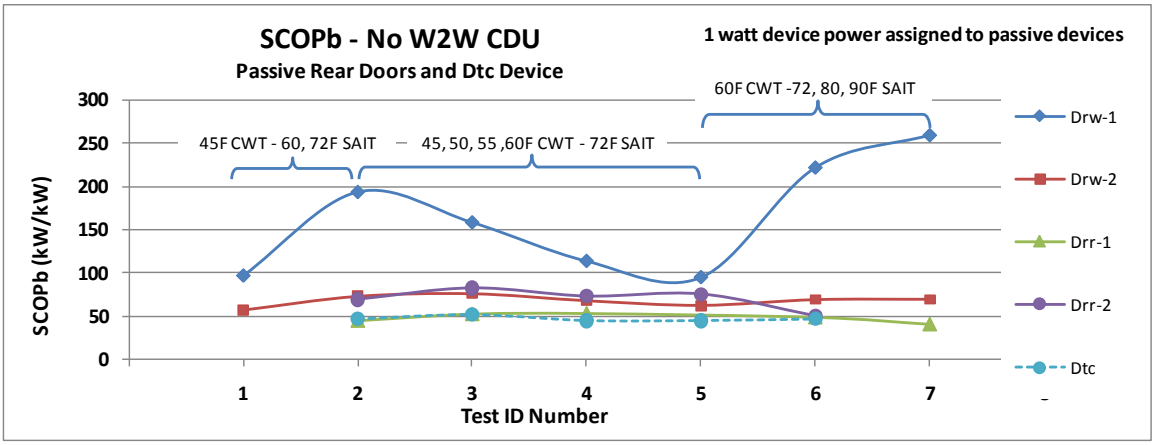

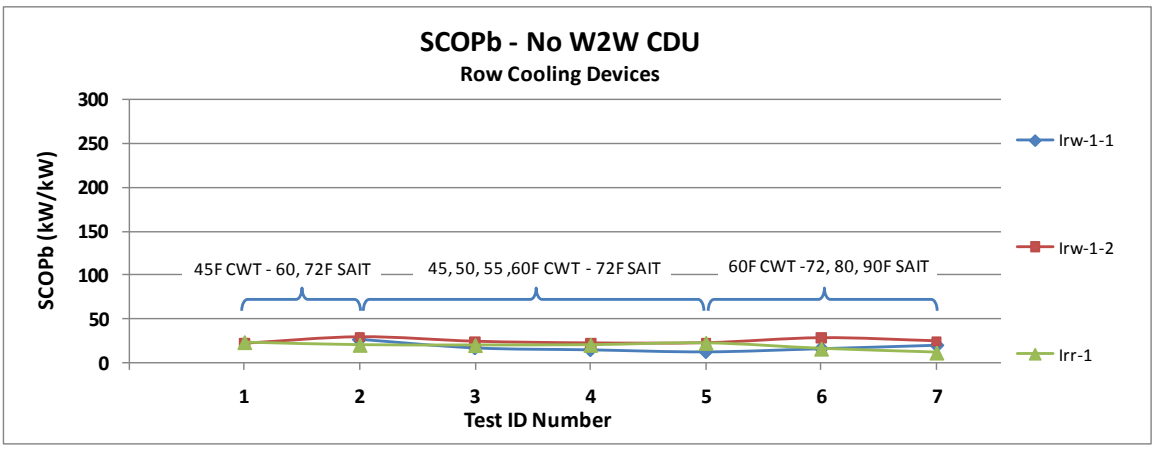

Figure 3-2: Chill-Off 2 $SCOP_b$ Performance
No Water-to-Water CDU Added

Source: Author

$SCOP_C$ Results

Figure 3-3 shows the results for SCOPc for the devices and configurations tested, by test ID number using the chilled water plant A model and without a water to water CDU added for the water cooled devices. Because the power needed to make the incremental amount of chilled water is much greater than all other cooling system power components, the range of SCOPc values drops dramatically compared to SCOPb. There is a trend of SCOPc increasing as the temperatures of the chilled water and server air inlets increase for test ID #‘ s 1 through 5. Tests 6 and 7 for a number of devices show a reduction in SCOPc, the reason for this was not fully investigated however three of the 5 tests with significant decreases in SCOPc for tests 6 and 7 show large increases in cooling device fan power for tests 6 and 7.

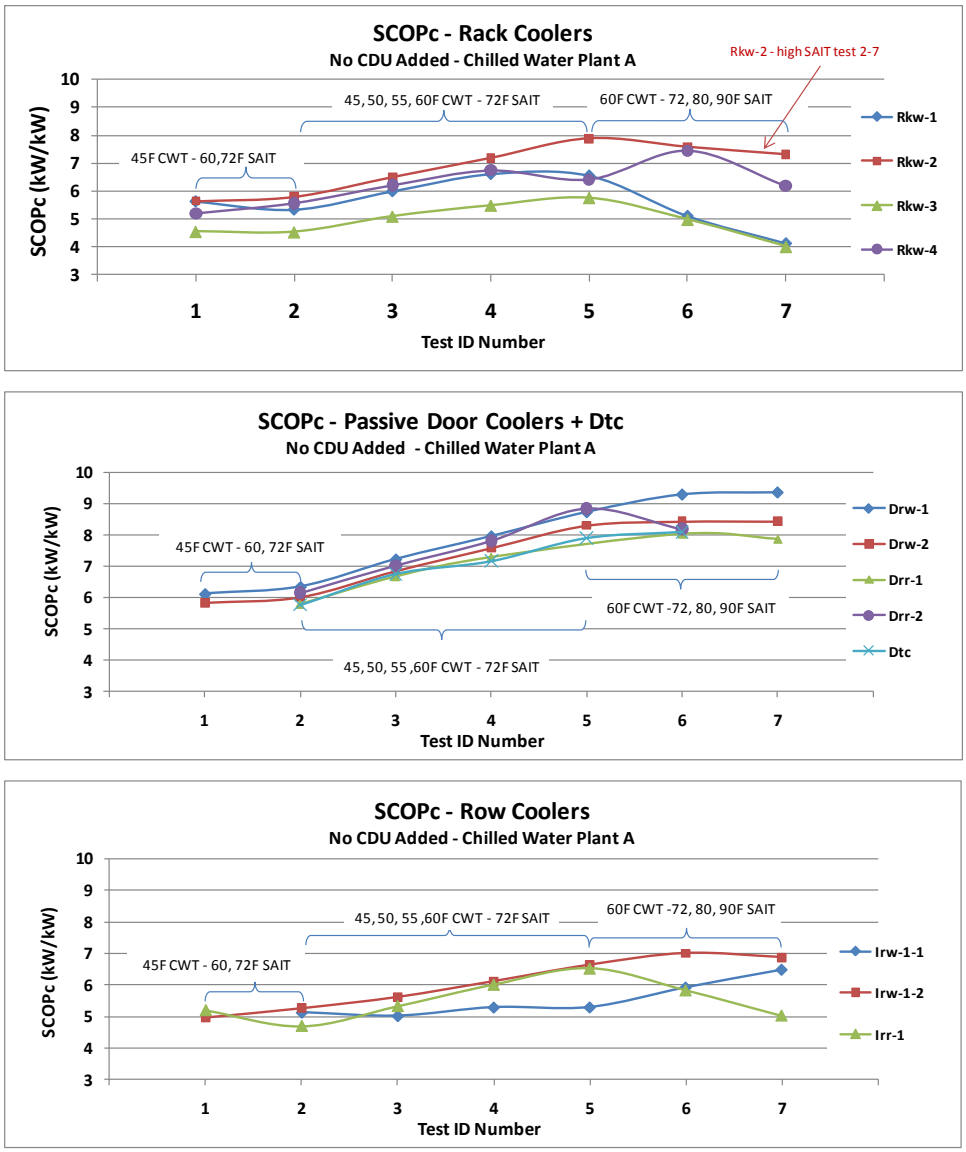

Figure 3-3: Chill-Off 2 $SCOP_C$ Performance Water-to-Water CDU Not Added

Source: Author

Figure 3-4 shows the results for SCOPc for the devices and configurations tested, by test ID number using the chilled water plant A model and with a water-to-water CDU added for the water cooled devices. Figure 3-4 shows results using a 30gpm per 100kW facility side CDU water flow. Figure 3-4b shows the results using a 75gpm facility side CDU water flow rate. Water-to-water CDU design and performance vary. If a water-to-water CDU is planned, consult the supplier to obtain performance specifications. The devices that do not contain fans have a performance advantage for one or two reasons 1) the CDU power is zero, in the cases shown in figure 3-4, 3-4b and 2) the device power is zero. A large percentage of installations use a water-to-water cooling distribution unit (CDU) to separate and control the water feeding multiple water-based cooling units. Note how the performance ranking of the water cooled devices changes relative to the refrigerant cooled devices when a water to water CDU is added. See appendix L to see the effect of using chilled water plant model B compared to plant A.

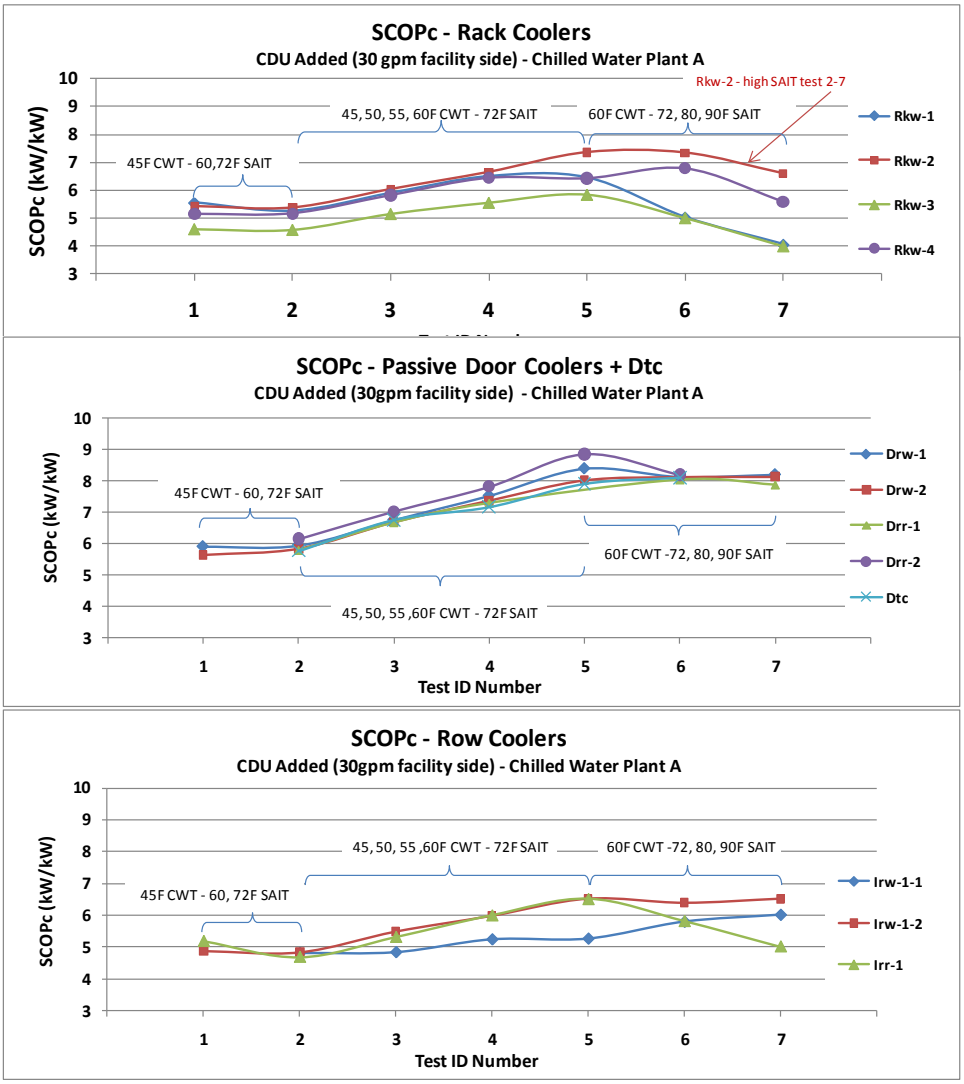

Figure 3-4: Chill-Off 2 $SCOP_C$ Performance
Water-to-Water CDU Added (30gpm facility flow)

Source: Author

Figure 3-4b shows the results for SCOPc for the devices and configurations tested, by test ID number using the chilled water plant A model and with a water-to-water CDU added for the water cooled devices. Figure 3-4b shows results using a 75gpm per 100kW facility side CDU water flow.

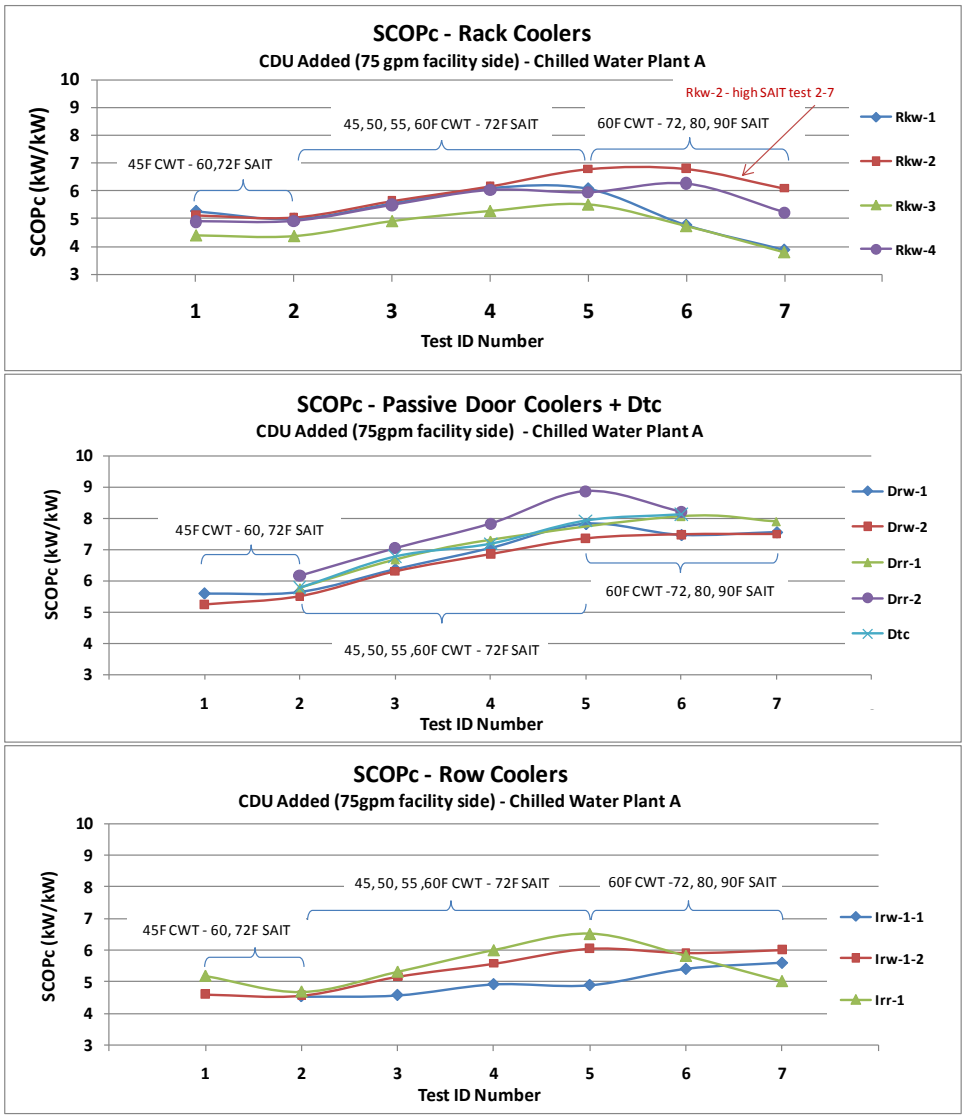

Figure 3-4b: Chill-Off 2 $SCOP_C$ Performance Water-to-Water CDU Added (75gpm facility flow)

Source: Author

COEEc Results

Figure 3-5 presents the COEEc performance results for all devices and test parameters using the chilled water plant model A and without a water-to-water CDU added to the water cooled devices.

COEEc values are calculated based on the SCOPc corresponding test values as defined per Eq. 2-11d with derivation shown in appendix G. The COEE results, calculated from test conditions, can easily provide false values when the cooling provided did not closely match the server power. In some test cases there was difficulty controlling the room temperature using the auxiliary cooling unit. In some of these tests the cooling device was improperly used to control the room ambient temperature this resulted in over-cooling (the cooling device tested removed more heat energy compared to server power) or under-cooling (the cooling device tested removed less heat energy compared to server power). The over and under cooling resulted in COEE values that are not characteristic of the cooling performance of the device tested. Therefore COEEc results are presented in the body of this report and graphed COEE results are not presented.

Figure 3-5 shows a clear trend for better energy efficiency as the test number increases (higher chilled water temperatures and higher server air inlet temperatures) as listed in table 2-1. For example, comparing the two cases 1-Irw-1-2 and 5-Irw-1-2 there is a 4.2% reduction in total power required.

If the Dtc results are not included, the COEEc-Plant A values range from 1.106 (test 7-Drw-1) to 1.25 (test 7-Rkw-3), 13 percent more total power is required for lowest efficiency compared to the best efficiency across all tests conditions and devices tested.

For a given test condition, for example test 5, the total data center power use difference using COEEc is 6-8%.

Without a water-to-water CDU the water cooled devices tend to be favored because CDU power is zero. In addition some water cooled devices are passive (no fans), resulting in the device power being zero, for example the water cooled rear doors fall into this category. Therefore the passive water cooled rear doors tend to have the best overall energy efficiency when a water-to-water CDU is not added, apart from the direct touch cooling (Dtc) device.

The performance difference between chilled water Plant A and Plant B are minimal at lower test numbers but approach 1.5% in some cases at higher test numbers. For example the difference in total power saved going from plant A to plant B is 1.5% for test case 7-Irw-2. Appendix L shows the COEEc performance using chilled water plant A and plant B for all devices and tests. The difference in COEEc between using chilled water plant A and plant B when a water-to-water CDU is added is similar to the case where a water-to-water CDU is not added.

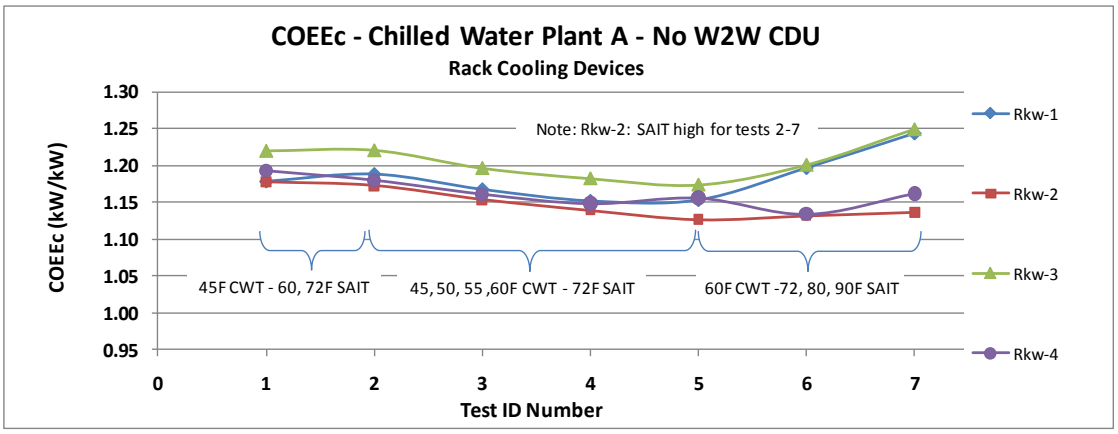

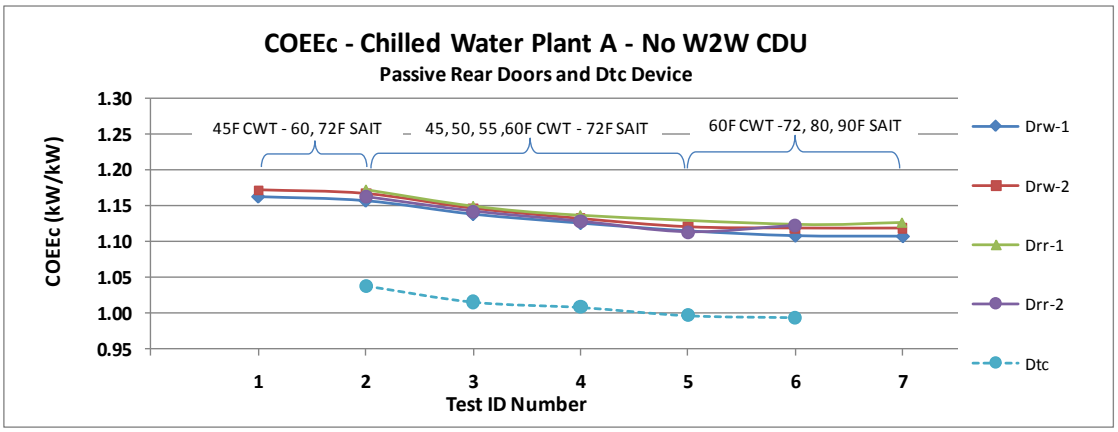

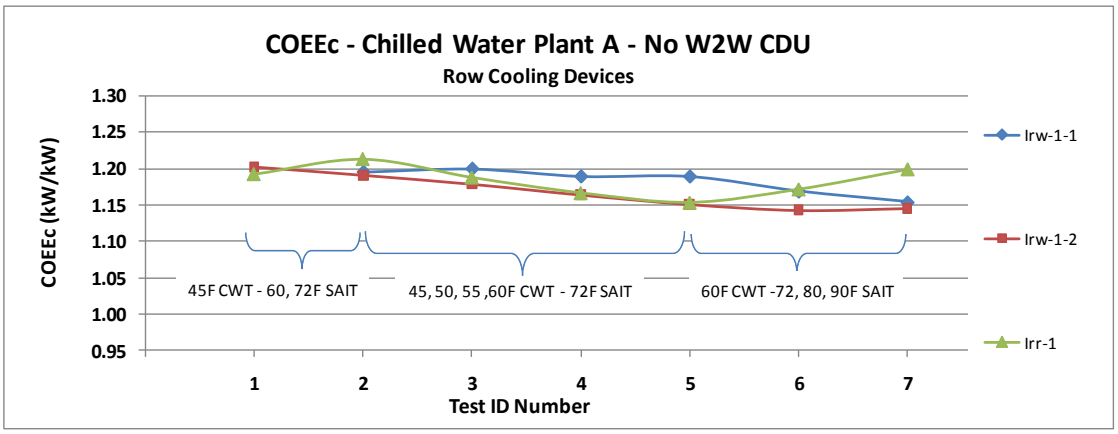

Figure 3-5: Chill-Off 2 COEEc Performance
Water-to-Water CDU Not Added

Source: Author

Figure 3-6 presents the COEEc performance results for all devices and test parameters using the chilled water plant model A and with a water-to-water CDU added to the water cooled devices.

The raw test data shows some higher server air inlet temperature (80°F (26.6°C) and 90F (32.2°C)) tests triggered large increases in device power causing significant reductions in energy use efficiency, test 7 for device Rkw-3 is an example. This was likely due to a device control system feature that increased the fan speed more than necessary; more investigation would likely uncover a sufficient lower fan speed. Note: figure 3-6 results do include a water-to-water CDU for the water cooled devices. The water-to-water CDU power addition is 1.25kW pump power per 100kW of server power.

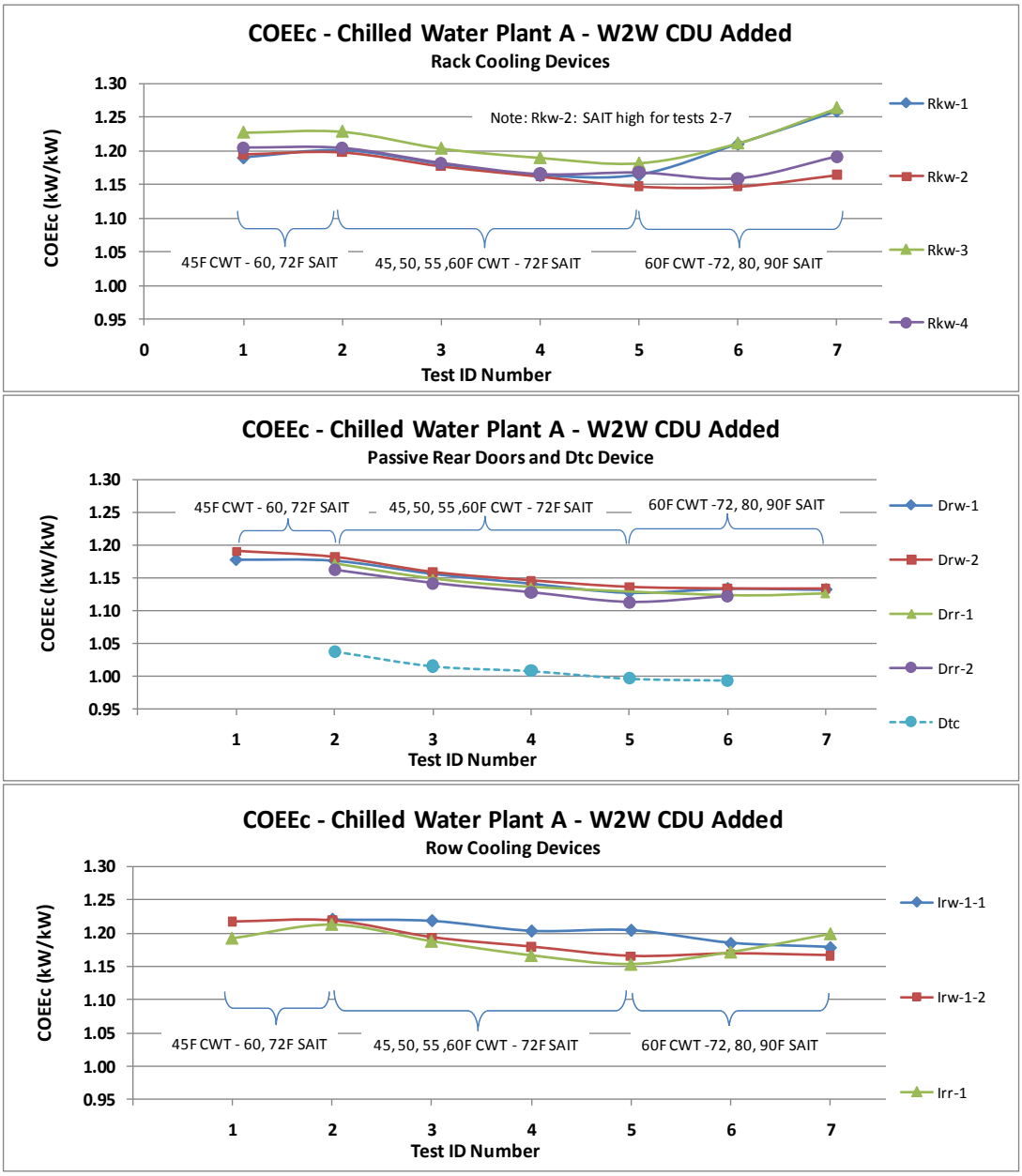

Figure 3-6: Chill-Off 2 COEEc Performance
Water-to-Water CDU Added (75 gpm facility flow rate)

Source: Author

Modular Datacenter Test Results

The modular datacenter type device was tested last. The servers were transferred from the test room used for the other device tests and installed in the modular datacenter housed in a container like enclosure, located some distance away but on the same SUN campus. Unfortunately the metering for water flow rate, water supply and return temperatures and electrical power readings were different and unfamiliar. An initial test to get a base line value for the container level thermal power balance and indication of metering quality was performed with the results shown in Figure 3-7. The thermal power balance (electrical power in – thermal power removed) was expected to be very low because the container was insulated and very well sealed. In addition the surrounding temperatures during the test were mild. The observed 30% heat power loss indicated that some of the basic metering instrumentation likely had some calibration issues. In addition the building control system did not provide a constant water supply temperature as is desired for thermal test anomaly forensics, see red line on Fig. 3-7. The time available for access to the modular datacenter and other resource limitations did not allow diagnosing the heat balance anomaly before it could be resolved. A test, to stress the control system of the modular datacenter device, was performed. The test started with running all the servers installed at the full compute load as was done in the previous tests. Next, the servers in two adjacent server racks were shut down and server inlet temperatures and fan speeds were observed. The observations were that the system responded with the needed cooling fan speed adjustments producing nearly constant server inlet temperatures for the remaining servers running at full power.

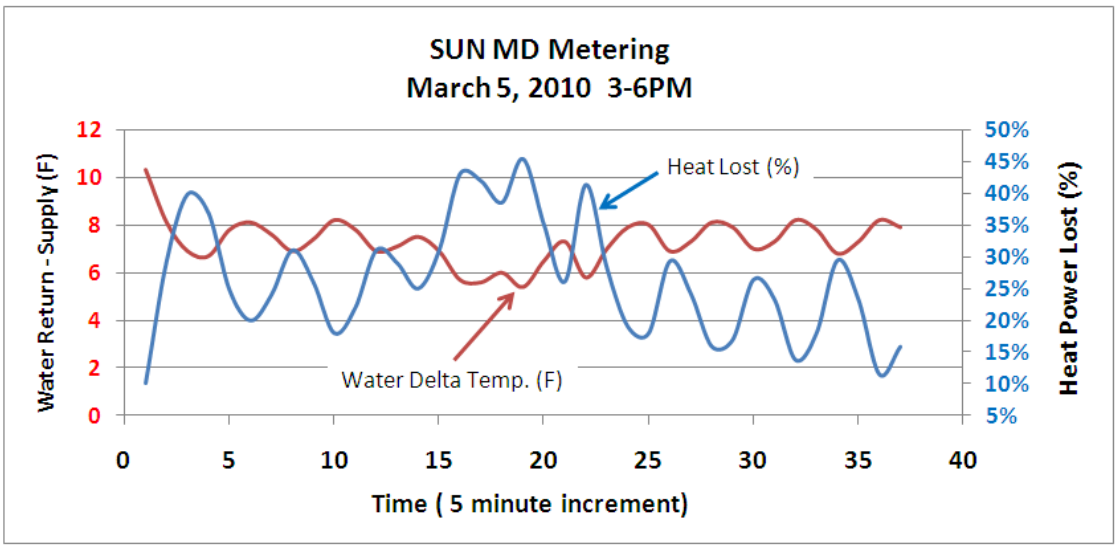

Figure 3-7: Modular Datacenter Metering Data Example

Source: Author

CHAPTER 4:
Conclusions and Recommendations

Eleven thermally close-coupled (rack level or aisle containment) type computer rack cooling devices were tested, energy efficiency comparison metrics developed and comparisons calculated.

The energy efficiency performance evaluation revealed the following:

- All of the devices tested can provide adequate cooling of rack mounted IT equipment using chilled water or chilled water and refrigerant.
- The variation across all test parameters and devices when considering total power use was 13 percent. For a given test condition, the total power use spanned a 6 to 8 percent range across all devices. For example 55°F (12.7°C) chilled water and 72°F (22.2°C) server air inlet the range from highest to lowest COEEc performance across the devices was 6-8 percent, which saves $180,000 per year for a one megawatt IT load data center considering Peak Day Pricing – California PG&E DR Program.
- The analysis included two chilled water plant energy efficiency models. The two models were a code minimum plant conforming to ASHRAE 90.1 and a plant that included a water side economizer. For these models, with a chilled water temperature of 45°F (7.2°C) the advantage of a water side economizer is minimal, at 60°F (15.5°C) the reduction in total energy use for the data center is 1.5 percent.
- There was a significant energy efficiency improvement as the temperature of the chilled water increased. The total energy savings was 5.3 percent if the chilled water temperature was raised from 45°F (7.2°C) to 60°F (15.5°C) and the server air inlet temperature was held constant at 72°F (22.2°C).
- If the chilled water temperature is increased it could lead to higher server air inlet temperatures. This could cause an increase in IT power due to server fans speeding up. Therefore when elevating chilled water temperatures an analysis of total power used is warranted. Server power increase as a function of server air inlet temperature is a function of server design and can vary significantly depending on make and model. If raising the server air inlet temperature allows turning off the chillers in the chilled water plant an increase in server power may still result in overall energy savings.
- Devices referred to as passive (no fan power required) such as water cooled and refrigerant cooled rear door designs tended to have better overall energy efficiency. The water cooled passive rear doors had the best energy efficiency when installed without a water-to-water CDU. When a water-to-water CDU was added to the water cooled devices, which is very common, the refrigerant cooled passive devices had slightly higher energy efficiency compared to the water cooled passive devices.

- Some devices tested exhibited a significant increase in fan power when server air inlet temperatures were raised to 80°F (26.6°C) and 90°F (32.2°C) causing the energy efficiency to drop. It is suggested that the manufacturers investigate whether the fan speed control, for these devices, can be modified to use less power if the data center operator elects to use high server inlet air set points.

Encouraging the use of higher chilled water temperatures, higher server air inlet temperatures and increased use of free cooling will yield improved energy efficiency. In addition careful planning of chilled water distribution systems using variable speed equipment along with eliminating bypasses through the use of two way modulating valves can yield energy savings with existing equipment and improve energy efficiency of facilities still in the planning stages.

This report does not consider capital or maintenance costs associated with installing this type of equipment. Additional cost of ownership evaluations should be undertaken to assist data center owners with purchase decisions.

It is recommended that future demonstrations of this type reach agreement on data reduction method details prior to the start of testing. In addition, initial commissioning and periodic metering calibration over the testing period needs to be an integral part of the test activities.

CHAPTER 5:
References

ASHRAE . 2007. ASHRAE 90.1-2007. ASHRAE Standard for Buildings Except Low-Rise Residential Buildings.

ASHRAE. 2007. ASHRAE 127-2007. Method of Testing for Rating Computer and Data Processing Room Unitary Air Conditioners (ANSI Approved).

CHAPTER 6:
Glossary

ASHRAE	American Society of Heating, Refrigerating and Air-Conditioning Engineers
Btu	British thermal unit
CDU	cooling distribution unit
CDU power	electrical power consumed by the CDU
chilled water plant power	the amount of additional electrical power needed to produce the chilled water
COEE	Chill-Off 2 Energy Efficiency – calculated using test data
COEEc	Chill-Off 2 Energy Efficiency calculated directly from SCOPc
COEEdt	COEE for the direct touch cooling solution
cooling device power	the UUT power minus the CDU power, if there is no CDU as part of the UUT, the device power equals the UUT power
CRAH	computer room air handler
CWP	Chilled Water Plant Power
device power	See cooling device power.
Feed or Feed Power	electrical power consumed by pump(s) for the chilled water distribution
GB	gigabyte
GSC	Gross Sensible Capacity
hydraulic power	Hydraulic power is the mechanical energy loss (kW) calculated using pressure and flow rate across heat exchanger The equation used is flow rate (gallons per minute) multiplied by the pressure difference (pounds per square inch differential) and a constant 0.000435 to obtain kilowatts.
IT	information technology
kW	kilowatt

NC	net cooling
PDU	power distribution units
PPS	power per server
PUE	power usage effectiveness
SCOP	sensible coefficient of performance – from ASHRAE 127-2007 Standard
SCOPa	sensible coefficient of performance – see chapter 2 – Eq. 2-8
SCOPb	sensible coefficient of performance – see chapter 2 – Eq. 2-9
SCOPc	sensible coefficient of performance – see chapter 2 – Eq. 2-10
SIAT	server inlet air temperatures
SLAT	server leaving air temperatures
UPS	uninterruptible power system
UUT	Unit Under Test. This refers to all the equipment being tested, for energy efficiency purposes, that is considered one device. For example the CDU is usually considered as part of the equipment tested.
VFD	variable frequency drive

APPENDIX A:
CRAH Performance Information

Computer Room Air Handler (CRAH) Estimate Information

Information Obtained from Liebert North America – 4/28/2010

Model Number:	CW Model CW114D; Chilled Water
Unit Power Supply:	460/ 3.60
Internal Filter Class:	Merv 7 Std. -4
Unit Airflow:	16500 cfm
ESP:	0.2 —WG

Cooling Fans

Quantity of Fans:	3
Quantity of Motors:	1
Type:	Centrifugal -FC
Full Load Amps:	21
Locked Rotor Amps:	116
Total Motor HP:	15

Performance – Mechanical Cooling

Enter Dry Bulb °F:	75
Enter Wet Bulb °F:	61.1
Enter Rel Humid %:	45
Air Vol ACFM:	16500
Face Vel FPM:	455
Enter Water Temp °F	45
Enter Fluid Rise °F:	12
Fluid Flow GPM:	76.7
Total Cool Cap kW:	125.1
Sens Cool Cap kW:	111.9
Total Unit PD ft H2O:	23.8
Leave Dry Bulb °F:	53.3
Leave Wet Bulb °F:	51.6
Motor kW:	10.33
Motor BHP:	11.77
Motor HP:	15.00

Capacity shown has been reduced by fan motor heat (net)
Test method as defined by ASHRAE 127-2007
Capacity Tolerance is 5%

APPENDIX A - continued:
CRAH Performance Calculation

CRAH Performance Calculation							
NCa	**NCb**	**SCOPa**	**SCOPb**	**SCOPc-A**	**SCOPc-B**	**COEEc-A**	**COEEc-B**
GSC-device	GSC-device-feed	NCa/device power	NCb/(device + ASHRAE feed)	NCb/(device + ASHRAE feed+ chilled water A)	NCb/(device + ASHRAE feed+ chilled water B)		
124.42	122.25	12.04	9.78	3.757	3.801	1.266	1.263

Water Temperature In (F)	45
Water Temperature Out (F)	57
Water Flow (gpm)	76.7
Gross Cooling (kW)	134.7
Gross Cooling (tons)	38.3
Device Power (kW)	10.3
ASHRAE Pumping Power (kW)	2.2
Chilled Water Plant A Power (kW)	20.0
Chilled Water Plant B Power (kW)	19.7

APPENDIX B:
Chilled Water Plant Models Description

Chilled Water Plant Model Information
3/17/2010 – Taylor Engineering, Alameda CA 94501

To the extent possible ASHRAE 90.1 Chapter 11 (ECB) Rules are followed.

Note: Chilled water plant models that included chilled water distribution pumping were made but used in this report.

Chillers

Type:	water cooled chillers meeting 90.1-2007 Addendum M Path B (chillers with VSD) minimum efficiencies: COP of 0.6 and IPLV of 0.4 at ARI 550/590 rating conditions
Quantity:	three chillers in the plant, n+1 design (one redundant) each sized for 330 tons to serve an actual 600 ton load (660 ton design load, 600 ton actual load 10% over sizing)
Evaporator Flow:	790 gpm/chiller evaporator
Chiller Condenser Flow:	920 gpm/chiller condenser
Performance:	0.58 kW per ton at design conditions of 44°F chws and 80°F cws.

Cooling Tower

Efficiency:	38.2 gpm/hp at 95°F CWR,85°F CWS, 75°F Twb (90.1 minimum efficiency)
Quantity:	3 cells one redundant each sized for 330 tons of chiller (10% over sizing) Selected for design flow of 925 gpm per cell (10°F DT)

Pumps

Rules:	from 90.1-2008 Chapter 11 rules
Chilled water pump power:	0.019 kW/gpm
Condenser water pump power:	0.022 kW/gpm

Water-Side Economizer

Rules:	criteria in 90.1-2007 Addendum BU
Size:	100% of the design load (660 tons) at 35°F Twb.
CHW Flow:	1580 gpm
CHWR:	62°F
CHWS:	52°F
CW Flow:	1580 gpm
CWS:	48°F
CWR:	58°F

WSE Heat Exchanger 4°F approach on the water side economizer heat exchanger

Climate
San Jose Airport TMY 3 File

APPENDIX C:
Test Recorded Data

Test# Ident.	IT 480 Power (kW)	IT 208 Power (kW)	Infra 480 Power (kW)	Infra 208 Power (kW)	Red Pump Power (w)	Aux. Cooler Power (kW)	UUT Water Return (F)	UUT Water Supply (F)	Main Water Flow (gpm)	Aux Water Return (F)	Aux Water Supply (F)	Aux Water Flow (F)	Server Air Inlet (F)	Device Water Flow (gpm)
1-Rkw-1	14.50	13.99	1.36	0.489	0.337	3.7	48.1	44.5	32.2	46.5	44.7	12.4	59.0	11.0
2-Rkw-1	14.85	14.34	1.43	0.625	0.335	3.7	48.1	44.5	31.9	46.7	44.6	12.4	71.6	11.0
3-Rkw-1	14.87	14.36	1.42	0.623	0.355	3.7	52.9	49.4	31.4	46.7	44.6	12.9	71.6	11.0
4-Rkw-1	14.88	14.37	1.47	0.651	0.354	3.7	57.8	54.1	31.9	46.7	44.6	13.1	71.6	11.0
5-Rkw-1	14.68	14.18	1.61	0.889	0.356	3.7	62.8	58.9	31.5	46.5	44.6	13.1	71.6	11.0
6-Rkw-1	14.83	14.33	2.00	1.432	0.354	3.7	62.9	59.0	30.0	46.8	44.7	12.9	79.0	11.0
7-Rkw-1	15.38	14.88	2.50	2.104	0.355	3.7	63.0	59.0	30.0	47.3	44.7	12.8	89.6	11.0
2-Irw1-1	107.14	105.99	4.23	4.020	1.104	3.5	60.5	44.5	44.8	43.0	43.4	12.0	72.7	44.8
3-Irw1-1	105.32	104.22	6.08	6.219	1.325	3.5	61.3	49.2	62.9	44.6	45.0	11.6	70.4	62.9
4-Irw1-1	106.00	104.87	6.50	6.702	1.788	3.5	63.4	54.9	85.6	44.6	45.1	11.9	72.4	85.6
5-Irw1-1	105.55	104.42	6.50	6.712	1.800	3.7	66.7	59.6	88.4	53.7	45.0	15.3	70.6	88.4
6-Irw1-1	113.70	112.36	6.38	6.578	1.667	3.5	69.8	60.3	82.0	44.2	44.7	12.4	80.6	82.0
7-Irw1-1	122.84	121.21	5.86	5.963	1.087	3.4	78.3	61.2	48.7	43.3	44.1	12.5	88.3	48.7
1-Irw1-2	105.22	104.15	4.72	4.565	1.666	3.6	54.1	45.1	79.1	43.6	42.7	11.6	59.9	79.1
2-Irw1-2	106.17	105.04	3.96	3.662	0.780	3.5	69.0	44.6	29.5	42.8	43.2	12.7	71.0	29.5
3-Irw1-2	105.84	104.71	4.59	4.397	1.511	3.5	59.7	49.6	75.2	44.7	45.0	11.6	72.3	75.2
4-Irw1-2	105.90	104.77	4.74	4.548	1.650	3.5	64.4	55.1	77.7	44.9	45.2	12.2	72.1	77.7
5-Irw1-2	106.35	105.22	4.71	4.552	1.663	3.5	68.8	59.7	81.2	44.5	44.9	14.1	72.2	81.2
6-Irw1-2	112.93	111.59	4.15	3.898	1.026	3.5	76.9	58.9	40.9	45.1	45.6	12.6	79.8	40.9
7-Irw1-2	119.76	118.21	4.54	4.342	1.473	3.4	71.0	60.2	69.8	45.1	45.7	12.2	86.1	69.8
1-Irr-1	103.95	102.82	6.92	7.678	4.225	0.0	52.2	46.4	135.5	45.7	46.2	8.0	66.3	135.5
2-Irr-1	104.50	103.34	3.69	3.807	0.090	0.0	60.8	43.5	42.6	48.3	47.8	7.4	72.1	42.6
3-Irr-1	104.50	103.34	4.23	4.469	0.752	0.0	59.8	49.6	70.8	49.3	48.4	7.1	72.4	70.8
4-Irr-1	104.94	103.76	5.40	5.896	2.078	0.0	62.7	55.8	108.9	51.8	50.0	6.5	74.9	108.9
5-Irr-1	104.13	102.99	8.64	9.802	5.162	3.3	63.4	58.7	175.7	45.7	45.9	11.9	73.0	175.7
6-Irr-1	108.56	107.29	5.44	6.042	0.727	3.3	71.3	59.5	58.0	45.8	46.2	12.4	78.5	58.0
7-Irr-1	120.53	118.90	5.83	6.658	0.334	3.3	83.8	59.2	24.9	56.4	46.4	13.2	89.6	24.9
1-Drw-1	16.62	16.15	1.42	0.563	0.452	3.7	47.4	44.4	46.2	45.4	42.3	15.3	60.1	9.5
2-Drw-1	16.67	16.20	1.27	0.323	0.261	3.6	48.7	44.4	34.3	42.4	42.7	14.5	69.8	5.1
3-Drw-1	16.67	16.20	1.26	0.325	0.262	3.6	53.3	49.4	36.7	42.3	42.6	14.6	70.3	6.0
4-Drw-1	16.69	16.22	1.31	0.404	0.311	3.5	57.8	54.2	38.6	42.5	42.8	14.8	70.3	8.1
5-Drw-1	16.79	16.33	1.48	0.632	0.509	3.5	62.1	59.0	46.9	42.5	42.9	13.2	71.5	10.1
6-Drw-1	16.86	16.39	1.25	0.316	0.259	3.5	62.9	59.2	31.5	42.8	43.2	13.0	75.6	3.5
7-Drw-1	16.92	16.46	1.24	0.319	0.259	3.4	63.1	59.2	30.9	42.8	43.5	12.9	78.2	3.1
1-Rkw-2	14.10	13.60	1.33	0.482	0.287	3.7	48.6	44.5	26.9	46.6	44.6	12.4	65.6	7.5
2-Rkw-2	15.33	14.82	1.30	0.471	0.288	3.7	48.7	44.5	25.3	46.9	44.2	12.4	78.9	4.8
3-Rkw-2	15.30	14.80	1.30	0.500	0.321	3.7	53.5	49.4	25.8	47.6	44.6	12.6	78.8	5.7
4-Rkw-2	15.32	14.81	1.31	0.500	0.318	3.7	58.3	54.2	25.4	46.8	44.1	12.8	79.6	6.2
5-Rkw-2	15.35	14.84	1.30	0.500	0.330	3.7	63.0	59.0	26.5	47.5	44.7	12.8	79.7	7.4
6-Rkw-2	8.32	7.78	1.30	0.405	0.304	3.7	61.7	59.0	21.6	46.5	44.3	13.0	86.6	5.3
7-Rkw-2	8.75	8.16	1.31	0.479	0.300	3.7	61.6	59.0	21.2	47.6	44.6	12.9	116.5	2.6
1-Rkw-3	11.43	10.90	1.62	0.900	0.353	3.7	47.7	44.6	30.4	45.6	44.6	12.1	59.9	11.0
2-Rkw-3	11.61	11.09	1.60	0.904	0.350	3.7	47.7	44.6	30.8	45.9	44.6	12.2	72.2	11.0
3-Rkw-3	11.62	11.09	1.65	0.903	0.352	3.7	52.4	49.4	32.2	46.2	44.6	12.6	72.2	11.0
4-Rkw-3	11.63	11.09	1.70	0.917	0.358	3.7	57.3	54.2	31.0	46.2	44.7	12.8	71.8	11.0
5-Rkw-3	11.59	11.06	1.64	0.905	0.355	3.7	62.1	59.1	30.5	46.2	44.7	12.8	72.1	11.0
6-Rkw-3	12.42	11.90	1.87	1.228	0.361	3.7	62.2	59.2	30.3	46.5	44.7	12.7	80.3	11.0
7-Rkw-3	13.51	13.01	2.23	1.800	0.358	3.7	62.4	59.2	30.2	46.5	44.7	12.7	90.5	11.0
2-Drr-1	104.50	103.46	3.31	3.292	1.575	3.5	53.3	45.3	88.6	44.8	44.9	10.2	71.1	88.6
3-Drr-1	106.87	105.75	2.68	2.670	1.028	3.5	57.1	50.2	122.4	44.8	45.0	11.5	73.9	122.4
4-Drr-1	108.49	107.32	6.37	6.325	5.155	3.5	58.6	54.0	187.9	44.9	45.1	11.6	75.4	187.9
6-Drr-1	112.47	111.19	3.72	3.702	2.022	3.5	65.3	59.4	141.7	45.1	45.4	12.3	80.3	141.7
7-Drr-1	123.82	122.16	1.72	1.718	0.142	3.4	80.5	60.2	37.6	45.7	46.1	12.6	91.6	37.6
2-Drr-2	11.05	10.50	1.48	1.471	0.572	3.5	51.4	45.7	19.1	43.8	43.8	13.3	70.9	19.1
3-Drr-2	10.53	9.99	1.59	1.578	0.685	3.5	53.9	50.2	33.4	43.8	43.8	13.3	71.0	33.4
4-Drr-2	11.60	11.08	1.65	1.647	0.758	3.5	58.3	55.2	39.7	43.8	43.8	13.5	72.0	39.7
5-Drr-2	11.76	11.20	1.74	1.728	0.834	3.5	63.6	61.0	48.5	44.1	44.2	13.5	74.3	48.5
6-Drr-2	18.48	17.94	1.69	1.682	0.787	3.4	63.4	60.2	42.4	45.3	44.5	13.3	78.7	42.4
1-Drw-2	13.47	12.97	1.29	0.402	0.343	3.8	47.0	44.4	29.1	49.9	44.2	14.0	62.6	9.0
2-Drw-2	13.65	13.15	1.28	0.397	0.332	3.6	47.9	44.5	29.0	44.4	44.5	12.3	71.9	9.0
3-Drw-2	13.01	12.50	1.30	0.415	0.348	3.6	52.9	49.4	29.2	44.3	44.5	12.6	76.7	9.0
4-Drw-2	13.04	12.52	1.30	0.409	0.344	3.6	57.5	54.3	28.4	45.8	44.8	12.9	76.6	9.0
5-Drw-2	13.16	12.67	1.30	0.408	0.352	3.6	62.1	59.1	27.7	46.0	44.5	13.0	77.3	9.0
6-Drw-2	13.60	13.10	1.30	0.402	0.344	3.6	62.5	59.1	27.4	44.8	45.0	12.4	80.8	9.0
7-Drw-2	13.57	13.07	1.30	0.400	0.345	3.6	62.5	59.1	27.5	44.8	45.0	12.3	80.6	9.0
2-Dtc	10.85	10.31	2.27	1.644	0.782	3.6	50.5	45.0	13.3	44.9	44.1	13.9	72.4	13.3
3-Dtc	10.99	10.40	2.27	1.643	0.785	3.6	56.1	50.9	15.6	44.3	43.9	14.1	73.0	15.6
4-Dtc	11.00	10.48	2.27	1.641	0.784	3.6	59.6	54.6	14.2	45.1	43.9	14.2	72.9	14.2
5-Dtc	11.03	10.50	2.29	1.640	0.788	3.6	64.3	59.5	15.0	45.5	44.1	14.4	73.2	15.0
6-Dtc	11.08	10.50	2.28	1.643	0.781	3.5	65.6	60.4	14.4	43.8	44.3	14.1	78.6	14.4
1-Rkw-4	13.26	12.75	1.45	0.675	0.336	3.6	48.1	44.5	30.6	45.1	44.7	12.1	67.6	10.0
2-Rkw-4	12.84	12.33	1.39	0.578	0.277	3.6	48.6	44.6	25.0	45.8	44.6	12.4	71.0	3.1

APPENDIX D: Test Quality Data

Test ID# Ident.	Supply Water (F)	Server Air In (F)	Total Room Electrical In (kW)	Total Room H2O Thermal Out (kW)	Room Heat Lost (kW)	Amount of In Lost (%)	GSC/IT (kW/kW)	GSC-Device/IT (kW/kW)	[NC_1] / IT (kW/kW)	[NC_2] / IT (kW/kW)
1-Rkw-1	44.5	59.0	19.54	20.16	-0.62	-3%	120%	119%	118%	116%
2-Rkw-1	44.5	71.6	19.97	20.68	-0.71	-4%	118%	116%	114%	113%
3-Rkw-1	49.4	71.6	19.98	20.28	-0.30	-2%	114%	112%	111%	109%
4-Rkw-1	54.1	71.6	20.04	21.19	-1.14	-6%	119%	117%	116%	114%
5-Rkw-1	58.9	71.6	19.98	21.37	-1.40	-7%	125%	122%	120%	119%
6-Rkw-1	59.0	79.0	20.51	20.70	-0.19	-1%	117%	110%	108%	107%
7-Rkw-1	59.0	89.6	21.58	22.51	-0.93	-4%	118%	106%	105%	103%
2-Irw1-1	44.5	72.7	114.87	103.95	10.91	10%	99%	96%	95%	93%
3-Irw1-1	49.2	70.4	114.90	110.77	4.12	4%	107%	102%	101%	99%
4-Irw1-1	54.9	72.4	115.98	105.78	10.21	9%	102%	97%	96%	94%
5-Irw1-1	59.6	70.6	115.71	112.33	3.38	3%	89%	84%	83%	81%
6-Irw1-1	60.3	80.6	123.55	112.33	11.23	9%	101%	97%	95%	94%
7-Irw1-1	61.2	88.3	132.12	120.77	11.35	9%	101%	97%	96%	94%
1-Irw1-2	45.1	59.9	113.58	105.52	8.06	7%	100%	97%	96%	94%
2-Irw1-2	44.6	71.0	113.61	104.17	9.44	8%	100%	97%	96%	94%
3-Irw1-2	49.6	72.3	113.94	111.27	2.66	2%	107%	104%	103%	101%
4-Irw1-2	55.1	72.1	114.15	104.57	9.58	8%	100%	98%	96%	95%
5-Irw1-2	59.7	72.2	114.55	106.82	7.73	7%	102%	100%	98%	97%
6-Irw1-2	58.9	79.8	120.53	107.22	13.30	11%	97%	94%	93%	91%
7-Irw1-2	60.2	86.1	127.72	109.60	18.12	14%	94%	91%	90%	88%
1-Irr-1	46.4	66.3	110.88	116.10	-5.22	-5%	113%	111%	110%	109%
2-Irr-1	43.5	72.1	108.19	108.36	-0.17	0%	104%	102%	101%	99%
3-Irr-1	49.6	72.4	108.73	107.34	1.39	1%	103%	100%	100%	98%
4-Irr-1	55.8	74.9	110.33	112.01	-1.67	-2%	106%	103%	103%	101%
5-Irr-1	58.7	73.0	116.08	120.66	-4.58	-4%	118%	115%	114%	112%
6-Irr-1	59.5	78.5	117.29	99.77	17.52	15%	94%	90%	90%	88%
7-Irr-1	59.2	89.6	129.66	109.29	20.37	16%	76%	72%	71%	69%
1-Drw-1	44.4	60.1	21.77	27.28	-5.51	-25%	125%	125%	124%	122%
2-Drw-1	44.4	69.8	21.52	20.94	0.58	3%	133%	133%	132%	131%
3-Drw-1	49.4	70.3	21.50	20.25	1.25	6%	129%	129%	128%	126%
4-Drw-1	54.2	70.3	21.54	19.62	1.92	9%	125%	125%	124%	122%
5-Drw-1	59.0	71.5	21.82	20.44	1.38	6%	129%	129%	128%	126%
6-Drw-1	59.2	75.6	21.58	16.22	5.37	25%	104%	104%	103%	101%
7-Drw-1	59.2	78.2	21.60	16.74	4.86	22%	109%	109%	108%	106%
1-Rkw-2	44.5	65.6	19.09	19.48	-0.39	-2%	117%	115%	114%	113%
2-Rkw-2	44.5	78.9	20.30	20.31	-0.01	0%	105%	104%	103%	101%
3-Rkw-2	49.4	78.8	20.28	21.08	-0.79	-4%	105%	104%	102%	101%
4-Rkw-2	54.2	79.6	20.30	20.30	0.00	0%	103%	102%	100%	99%
5-Rkw-2	59.0	79.7	20.32	20.63	-0.31	-2%	104%	103%	101%	100%
6-Rkw-2	59.0	86.6	13.29	12.64	0.65	5%	108%	107%	105%	104%
7-Rkw-2	59.0	116.5	13.75	13.39	0.37	3%	96%	94%	93%	91%
1-Rkw-3	44.6	59.9	16.74	15.51	1.23	7%	127%	122%	121%	119%
2-Rkw-3	44.6	72.2	16.91	16.03	0.88	5%	124%	119%	118%	116%
3-Rkw-3	49.4	72.2	16.98	17.35	-0.37	-2%	131%	126%	125%	123%
4-Rkw-3	54.2	71.8	17.05	16.95	0.10	1%	128%	123%	122%	120%
5-Rkw-3	59.1	72.1	16.94	15.89	1.05	6%	118%	113%	111%	110%
6-Rkw-3	59.2	80.3	18.01	16.90	1.10	6%	113%	106%	105%	103%
7-Rkw-3	59.2	90.5	19.44	17.59	1.85	10%	110%	99%	97%	96%
2-Drr-1	45.3	71.1	111.32	103.82	7.50	7%	100%	100%	100%	98%
3-Drr-1	50.2	73.9	113.05	123.44	-10.39	-9%	117%	117%	116%	115%
4-Drr-1	54.0	75.4	118.35	126.88	-8.53	-7%	118%	118%	118%	116%
6-Drr-1	59.4	80.3	119.65	120.60	-0.95	-1%	109%	109%	108%	107%
7-Drr-1	60.2	91.6	128.91	110.99	17.92	14%	91%	91%	91%	89%
2-Drr-2	45.7	70.9	16.00	16.21	-0.21	-1%	154%	154%	153%	151%
3-Drr-2	50.2	71.0	15.57	18.22	-2.65	-17%	182%	182%	181%	180%
4-Drr-2	55.2	72.0	16.72	17.89	-1.17	-7%	161%	161%	161%	159%
5-Drr-2	61.0	74.3	16.95	18.59	-1.64	-10%	166%	166%	166%	164%
6-Drr-2	60.2	78.7	23.59	21.72	1.88	8%	112%	112%	111%	110%
1-Drw-2	44.4	62.6	18.52	22.94	-4.41	-24%	87%	87%	86%	84%
2-Drw-2	44.5	71.9	18.56	14.36	4.20	23%	110%	110%	109%	107%
3-Drw-2	49.4	76.7	17.89	14.82	3.08	17%	121%	121%	119%	118%
4-Drw-2	54.3	76.6	17.95	15.26	2.70	15%	107%	107%	106%	104%
5-Drw-2	59.1	77.3	18.10	15.30	2.80	15%	98%	98%	96%	95%
6-Drw-2	59.1	80.8	18.46	13.40	5.06	27%	105%	105%	103%	102%
7-Drw-2	59.1	80.6	18.44	13.49	4.95	27%	105%	105%	104%	103%
2-Dtc	45.0	72.4	16.71	12.24	4.47	27%	104%	104%	103%	101%
3-Dtc	50.9	73.0	16.82	12.69	4.13	25%	115%	115%	114%	113%
4-Dtc	54.6	72.9	16.85	12.96	3.89	23%	99%	99%	99%	97%
5-Dtc	59.5	73.2	16.90	13.52	3.38	20%	99%	99%	99%	97%
6-Dtc	60.4	78.6	16.87	9.91	6.95	41%	104%	104%	103%	101%
1-Rkw-4	44.5	67.6	18.33	16.59	1.74	10%	124%	121%	120%	118%
2-Rkw-4	44.6	71.0	17.88	16.88	1.00	6%	120%	118%	117%	115%
3-Rkw-4	49.4	71.9	17.96	16.96	1.00	6%	119%	117%	116%	114%

APPENDIX E: Adjusted Test Data

Red Pump data adjusted for passive devices to equal 1 watt power.

Test# Ident.	IT 480 Power (kW)	IT 208 Power (kW)	Infra 480 Power (kW)	Infra 208 Power (kW)	Red Pump Power (kW)	Aux. Cooler Power (kW)	UUT Water Return (F)	UUT Water Supply (F)	Main Water Flow (gpm)	Aux Water Return (F)	Aux Water Supply (F)	Aux Water Flow (F)	Server Air Inlet (F)	Device Water Flow (gpm)
1-Rkw-1	14.50	13.99	1.531	0.664	0.337	3.7	48.1	44.5	32.2	46.5	44.7	12.4	59.0	11.0
2-Rkw-1	14.85	14.34	1.611	0.804	0.335	3.7	48.1	44.5	31.9	46.7	44.6	12.4	71.6	11.0
3-Rkw-1	14.87	14.36	1.599	0.802	0.355	3.7	52.9	49.4	31.4	46.7	44.6	12.9	71.6	11.0
4-Rkw-1	14.88	14.37	1.650	0.830	0.354	3.7	57.8	54.1	31.9	46.7	44.6	13.1	71.6	11.0
5-Rkw-1	14.68	14.18	1.789	1.066	0.356	3.7	62.8	58.9	31.5	46.5	44.6	13.1	71.6	11.0
6-Rkw-1	14.83	14.33	2.175	1.611	0.354	3.7	62.9	59.0	30.0	46.8	44.7	12.9	79.0	11.0
7-Rkw-1	15.38	14.88	2.690	2.290	0.355	3.7	63.0	59.0	30.0	47.3	44.7	12.8	89.6	11.0
2-Irw1-1	107.14	105.99	5.556	5.345	1.104	3.5	60.5	44.5	44.8	43.0	43.4	12.0	72.7	44.8
3-Irw1-1	105.32	104.22	7.387	7.522	1.325	3.5	61.3	49.2	62.9	44.6	45.0	11.6	70.4	62.9
4-Irw1-1	106.00	104.87	7.809	8.013	1.788	3.5	63.4	54.9	85.6	44.6	45.1	11.9	72.4	85.6
5-Irw1-1	105.55	104.42	7.809	8.018	1.800	3.7	66.7	59.6	88.4	53.7	45.0	15.3	70.6	88.4
6-Irw1-1	113.70	112.36	7.787	7.983	1.667	3.5	69.8	60.3	82.0	44.2	44.7	12.4	80.6	82.0
7-Irw1-1	122.84	121.21	7.372	7.478	1.087	3.4	78.3	61.2	48.7	43.3	44.1	12.5	88.3	48.7
1-Irw1-2	105.22	104.15	6.017	5.867	1.666	3.6	54.1	45.1	79.1	43.6	42.7	11.6	59.9	79.1
2-Irw1-2	106.17	105.04	5.268	4.975	0.780	3.5	69.0	44.6	29.5	42.8	43.2	12.7	71.0	29.5
3-Irw1-2	105.84	104.71	5.894	5.705	1.511	3.5	59.7	49.6	75.2	44.7	45.0	11.6	72.3	75.2
4-Irw1-2	105.90	104.77	6.048	5.858	1.650	3.5	64.4	55.1	77.7	44.9	45.2	12.2	72.1	77.7
5-Irw1-2	106.35	105.22	6.026	5.867	1.663	3.5	68.8	59.7	81.2	44.5	44.9	14.1	72.2	81.2
6-Irw1-2	112.93	111.59	5.542	5.293	1.026	3.5	76.9	58.9	40.9	45.1	45.6	12.6	79.8	40.9
7-Irw1-2	119.76	118.21	6.013	5.820	1.473	3.4	71.0	60.2	69.8	45.1	45.7	12.2	86.1	69.8
1-Irr-1	103.95	102.82	6.924	7.678	4.225	0.0	52.2	46.4	135.5	45.7	46.2	8.0	66.3	135.5
2-Irr-1	104.50	103.34	3.690	3.807	0.090	0.0	60.8	43.5	42.6	48.3	47.8	7.4	72.1	42.6
3-Irr-1	104.50	103.34	4.227	4.469	0.752	0.0	59.8	49.6	70.8	49.3	48.4	7.1	72.4	70.8
4-Irr-1	104.94	103.76	5.396	5.896	2.078	0.0	62.7	55.8	108.9	51.8	50.0	6.5	74.9	108.9
5-Irr-1	104.13	102.99	8.640	9.802	5.162	3.3	63.4	58.7	175.7	45.7	45.9	11.9	73.0	175.7
6-Irr-1	108.56	107.29	5.439	6.042	0.727	3.3	71.3	59.5	58.0	45.8	46.2	12.4	78.5	58.0
7-Irr-1	120.53	118.90	5.827	6.658	0.334	3.3	83.8	59.2	24.9	56.4	46.4	13.2	89.6	24.9
1-Drw-1	16.62	16.15	1.626	0.765	0.562	3.7	47.4	44.4	46.2	45.4	42.3	15.3	60.1	9.5
2-Drw-1	16.67	16.20	1.474	0.526	0.322	3.6	48.7	44.4	34.3	42.4	42.7	14.5	69.8	5.1
3-Drw-1	16.67	16.20	1.461	0.527	0.324	3.6	53.3	49.4	36.7	42.3	42.6	14.6	70.3	6.0
4-Drw-1	16.69	16.22	1.514	0.607	0.403	3.5	57.8	54.2	38.6	42.5	42.8	14.8	70.3	8.1
5-Drw-1	16.79	16.33	1.683	0.836	0.631	3.5	62.1	59.0	46.9	42.5	42.9	13.2	71.5	10.1
6-Drw-1	16.86	16.39	1.455	0.521	0.315	3.5	62.9	59.2	31.5	42.8	43.2	13.0	75.6	3.5
7-Drw-1	16.92	16.46	1.442	0.525	0.318	3.4	63.1	59.2	30.9	42.8	43.5	12.9	78.2	3.1
1-Rkw-2	14.10	13.60	1.500	0.652	0.287	3.7	48.6	44.5	26.9	46.6	44.6	12.4	65.6	7.5
2-Rkw-2	15.33	14.82	1.488	0.656	0.288	3.7	48.7	44.5	25.3	46.9	44.2	12.4	78.9	4.8
3-Rkw-2	15.30	14.80	1.486	0.685	0.321	3.7	53.5	49.4	25.8	47.6	44.6	12.6	78.8	5.7
4-Rkw-2	15.32	14.81	1.493	0.685	0.318	3.7	58.3	54.2	25.4	46.8	44.1	12.8	79.6	6.2
5-Rkw-2	15.35	14.84	1.489	0.686	0.330	3.7	63.0	59.0	26.5	47.5	44.7	12.8	79.7	7.4
6-Rkw-2	8.32	7.78	1.396	0.502	0.304	3.7	61.7	59.0	21.6	46.5	44.3	13.0	86.6	5.3
7-Rkw-2	8.75	8.16	1.412	0.581	0.300	3.7	61.6	59.0	21.2	47.6	44.6	12.9	116.5	2.6
1-Rkw-3	11.43	10.90	1.753	1.036	0.353	3.7	47.7	44.6	30.4	45.6	44.6	12.1	59.9	11.0
2-Rkw-3	11.61	11.09	1.740	1.042	0.350	3.7	47.7	44.6	30.8	45.9	44.6	12.2	72.2	11.0
3-Rkw-3	11.62	11.09	1.791	1.041	0.352	3.7	52.4	49.4	32.2	46.2	44.6	12.6	72.2	11.0
4-Rkw-3	11.63	11.09	1.838	1.056	0.358	3.7	57.3	54.2	31.0	46.2	44.7	12.8	71.8	11.0
5-Rkw-3	11.59	11.06	1.779	1.043	0.355	3.7	62.1	59.1	30.5	46.2	44.7	12.8	72.1	11.0
6-Rkw-3	12.42	11.90	2.018	1.377	0.361	3.7	62.2	59.2	30.3	46.5	44.7	12.7	80.3	11.0
7-Rkw-3	13.51	13.01	2.395	1.963	0.358	3.7	62.4	59.2	30.2	46.5	44.7	12.7	90.5	11.0
2-Drr-1	104.50	103.46	3.311	3.292	1.649	3.5	53.3	45.3	88.6	44.8	44.9	10.2	71.1	88.6
3-Drr-1	106.87	105.75	2.682	2.670	1.027	3.5	57.1	50.2	122.4	44.8	45.0	11.5	73.9	122.4
4-Drr-1	108.49	107.32	6.372	6.325	4.682	3.5	58.6	54.0	187.9	44.9	45.1	11.6	75.4	187.9
6-Drr-1	112.47	111.19	3.723	3.702	2.060	3.5	65.3	59.4	141.7	45.1	45.4	12.3	80.3	141.7
7-Drr-1	123.82	122.16	1.717	1.718	0.075	3.4	80.5	60.2	37.6	45.7	46.1	12.6	91.6	37.6
2-Drr-2	11.05	10.50	1.476	1.471	0.648	3.5	51.4	45.7	19.1	43.8	43.8	13.3	70.9	19.1
3-Drr-2	10.53	9.99	1.585	1.578	0.756	3.5	53.9	50.2	33.4	43.8	43.8	13.3	71.0	33.4
4-Drr-2	11.60	11.08	1.655	1.647	0.825	3.5	58.3	55.2	39.7	43.8	43.8	13.5	72.0	39.7
5-Drr-2	11.76	11.20	1.736	1.728	0.906	3.5	63.6	61.0	48.5	44.1	44.2	13.5	74.3	48.5
6-Drr-2	18.48	17.94	1.689	1.682	0.860	3.4	63.4	60.2	42.4	45.3	44.5	13.3	78.7	42.4
1-Drw-2	13.47	12.97	1.456	0.565	0.401	3.8	47.0	44.4	29.1	49.9	44.2	14.0	62.6	9.0
2-Drw-2	13.65	13.15	1.442	0.562	0.396	3.6	47.9	44.5	29.0	44.4	44.5	12.3	71.9	9.0
3-Drw-2	13.01	12.50	1.456	0.571	0.414	3.6	52.9	49.4	29.2	44.3	44.5	12.6	76.7	9.0
4-Drw-2	13.04	12.52	1.457	0.566	0.408	3.6	57.5	54.3	28.4	45.8	44.8	12.9	76.6	9.0
5-Drw-2	13.16	12.67	1.457	0.566	0.407	3.6	62.1	59.1	27.7	46.0	44.5	13.0	77.3	9.0
6-Drw-2	13.60	13.10	1.464	0.566	0.401	3.6	62.5	59.1	27.4	44.8	45.0	12.4	80.8	9.0
7-Drw-2	13.57	13.07	1.463	0.564	0.399	3.6	62.5	59.1	27.5	44.8	45.0	12.3	80.6	9.0
2-Dtc	10.85	10.31	2.267	1.644	0.822	3.6	50.5	45.0	13.3	44.9	44.1	13.9	72.4	13.3
3-Dtc	10.99	10.40	2.271	1.643	0.821	3.6	56.1	50.9	15.6	44.3	43.9	14.1	73.0	15.6
4-Dtc	11.00	10.48	2.269	1.641	0.819	3.6	59.6	54.6	14.2	45.1	43.9	14.2	72.9	14.2
5-Dtc	11.03	10.50	2.293	1.640	0.819	3.6	64.3	59.5	15.0	45.5	44.1	14.4	73.2	15.0
6-Dtc	11.08	10.50	2.280	1.643	0.821	3.5	65.6	60.4	14.4	43.8	44.3	14.1	78.6	14.4
1-Rkw-4	13.26	12.75	1.614	0.834	0.336	3.6	48.1	44.5	30.6	45.1	44.7	12.1	67.6	10.0
2-Rkw-4	12.84	12.33	1.546	0.732	0.277	3.6	48.6	44.6	25.0	45.8	44.6	12.4	71.0	3.1

APPENDIX F: Calculated Data

No

Water-To-Water

CDU Added

Test ID# Ident.	UUT Water Cooling (kW)	UUT Water Cooling (tons)	Aux. Cooler Gross Cooling (kW)	Aux. Cooler Net Cooling (kW)	Feed Power (kW)	CDU Power (kW)	Device Power (kW)	Chilled W Plant-A Power (kW)	Chilled W Plant-B Power (kW)
1-Rkw-1	16.82	4.78	3.344	-0.344	0.239	0.000	0.153	2.54	2.48
2-Rkw-1	16.87	4.80	3.807	0.114	0.239	0.000	0.290	2.54	2.49
3-Rkw-1	16.39	4.66	3.892	0.203	0.239	0.000	0.268	2.15	2.11
4-Rkw-1	17.15	4.88	4.040	0.350	0.239	0.000	0.297	1.98	1.87
5-Rkw-1	17.77	5.05	3.603	-0.082	0.239	0.000	0.532	1.83	1.57
6-Rkw-1	16.80	4.78	3.900	0.214	0.239	0.000	1.078	1.73	1.47
7-Rkw-1	17.57	5.00	4.941	1.241	0.239	0.000	1.750	1.81	1.54
2-Irw1-1	104.75	29.79	-0.797	-4.295	0.972	0.000	2.916	15.79	15.46
3-Irw1-1	111.45	31.70	-0.679	-4.170	1.364	0.000	4.894	14.72	14.46
4-Irw1-1	106.54	30.30	-0.762	-4.254	1.855	0.000	4.915	12.10	11.26
5-Irw1-1	92.82	26.40	19.503	15.843	1.917	0.000	4.912	9.42	7.94
6-Irw1-1	113.40	32.25	-1.075	-4.546	1.778	0.000	4.911	11.31	9.33
7-Irw1-1	122.22	34.76	-1.453	-4.871	1.056	0.000	4.876	11.96	9.62
1-Irw1-2	103.99	29.58	1.524	-2.118	1.716	0.000	2.898	15.41	15.13
2-Irw1-2	104.97	29.85	-0.795	-4.283	0.639	0.000	2.882	15.77	15.45
3-Irw1-2	111.86	31.81	-0.587	-4.102	1.631	0.000	2.886	14.61	14.33
4-Irw1-2	105.06	29.88	-0.492	-4.002	1.686	0.000	2.898	11.86	10.99
5-Irw1-2	107.65	30.62	-0.824	-4.313	1.760	0.000	2.889	10.89	9.14
6-Irw1-2	108.08	30.74	-0.853	-4.307	0.887	0.000	2.872	11.15	9.57
7-Irw1-2	110.61	31.46	-1.013	-4.438	1.514	0.000	2.870	11.08	9.19
1-Irr-1	116.67	33.18	-0.571	-0.571	1.533	0.703	2.632	16.68	16.43
2-Irr-1	107.85	30.67	0.512	0.512	1.541	0.707	2.896	16.77	16.32
3-Irr-1	106.43	30.27	0.905	0.905	1.541	0.707	2.896	13.90	13.63
4-Irr-1	110.27	31.36	1.740	1.740	1.547	0.710	2.997	12.24	11.22
5-Irr-1	121.06	34.43	-0.398	-3.704	1.535	0.705	2.998	12.52	10.78
6-Irr-1	100.45	28.57	-0.680	-3.971	1.599	0.734	3.673	10.21	8.62
7-Irr-1	89.87	25.56	19.427	16.120	1.772	0.813	4.682	9.19	7.82
1-Drw-1	20.17	5.74	7.106	3.374	0.205	0.000	0.001	3.05	2.99
2-Drw-1	21.61	6.15	-0.665	-4.251	0.110	0.000	0.001	3.27	3.20
3-Drw-1	20.95	5.96	-0.693	-4.260	0.131	0.000	0.001	2.75	2.70
4-Drw-1	20.32	5.78	-0.695	-4.234	0.176	0.000	0.001	2.35	2.21
5-Drw-1	21.12	6.01	-0.677	-4.227	0.220	0.000	0.001	2.17	1.85
6-Drw-1	17.06	4.85	-0.838	-4.316	0.075	0.000	0.001	1.75	1.49
7-Drw-1	17.94	5.10	-1.201	-4.649	0.068	0.000	0.001	1.84	1.56
1-Rkw-2	15.89	4.52	3.586	-0.071	0.163	0.000	0.195	2.40	2.35
2-Rkw-2	15.56	4.43	4.753	1.079	0.105	0.000	0.184	2.35	2.30
3-Rkw-2	15.53	4.42	5.544	1.866	0.124	0.000	0.179	2.04	2.00
4-Rkw-2	15.21	4.33	5.085	1.408	0.134	0.000	0.182	1.76	1.65
5-Rkw-2	15.39	4.38	5.247	1.573	0.160	0.000	0.170	1.58	1.35
6-Rkw-2	8.41	2.39	4.230	0.560	0.116	0.000	0.101	0.86	0.74
7-Rkw-2	7.87	2.24	5.516	1.821	0.056	0.000	0.180	0.81	0.69
1-Rkw-3	13.82	3.93	1.694	-2.002	0.239	0.000	0.547	2.08	2.04
2-Rkw-3	13.78	3.92	2.248	-1.454	0.239	0.000	0.554	2.07	2.03
3-Rkw-3	14.54	4.13	2.814	-0.899	0.239	0.000	0.550	1.91	1.87
4-Rkw-3	14.17	4.03	2.773	-0.949	0.239	0.000	0.559	1.64	1.54
5-Rkw-3	13.01	3.70	2.872	-0.841	0.239	0.000	0.550	1.33	1.14
6-Rkw-3	13.50	3.84	3.406	-0.309	0.239	0.000	0.867	1.38	1.18
7-Rkw-3	14.26	4.05	3.337	-0.363	0.239	0.000	1.442	1.46	1.24
2-Drr-1	103.92	29.56	-0.099	-3.610	1.542	0.708	0.001	15.34	15.07
3-Drr-1	123.69	35.18	-0.244	-3.742	1.576	0.724	0.001	15.89	15.55
4-Drr-1	127.15	36.16	-0.269	-3.759	1.600	0.734	0.001	14.77	13.93
6-Drr-1	121.03	34.42	-0.424	-3.888	1.658	0.761	0.001	12.32	10.42
7-Drr-1	111.64	31.75	-0.647	-4.018	1.821	0.836	0.001	11.17	9.25
2-Drr-2	16.13	4.59	0.083	-3.387	0.157	0.072	0.001	2.35	2.31
3-Drr-2	18.17	5.17	0.048	-3.405	0.149	0.068	0.001	2.33	2.28
4-Drr-2	17.86	5.08	0.026	-3.438	0.165	0.076	0.001	2.01	1.86
5-Drr-2	18.63	5.30	-0.037	-3.490	0.167	0.077	0.001	1.83	1.48
6-Drr-2	20.09	5.71	1.624	-1.794	0.267	0.123	0.001	2.01	1.67
1-Drw-2	11.27	3.21	11.660	7.899	0.195	0.000	0.001	1.71	1.67
2-Drw-2	14.50	4.12	-0.147	-3.777	0.195	0.000	0.001	2.19	2.14
3-Drw-2	15.10	4.29	-0.281	-3.864	0.195	0.000	0.001	1.98	1.94
4-Drw-2	13.44	3.82	1.817	-1.801	0.195	0.000	0.001	1.55	1.46
5-Drw-2	12.37	3.52	2.935	-0.700	0.195	0.000	0.001	1.27	1.08
6-Drw-2	13.72	3.90	-0.316	-3.879	0.195	0.000	0.001	1.41	1.20
7-Drw-2	13.78	3.92	-0.294	-3.860	0.195	0.000	0.001	1.41	1.21
2-Dtc	10.67	3.04	1.565	-2.028	0.154	0.071	0.001	1.59	1.56
3-Dtc	11.94	3.40	0.749	-2.806	0.155	0.071	0.001	1.50	1.46
4-Dtc	10.43	2.97	2.534	-1.047	0.156	0.072	0.001	1.19	1.11
5-Dtc	10.45	2.97	3.075	-0.506	0.157	0.072	0.001	1.06	0.90
6-Dtc	10.87	3.09	-0.958	-4.465	0.157	0.072	0.001	1.08	0.89
1-Rkw-4	15.80	4.49	0.789	-2.826	0.217	0.000	0.338	2.38	2.33

APPENDIX G: Calculations COEEc, SCOPc

Derivation of SCOPc and COEEc Relationship

SCOPc = Net Cooling (NC) / (Device + CDU + Feed + CWP)

Let A = Device + CDU + Feed + CWP

Therefore SCOPc = NC / A or 1/ SCOPc = A / NC

Multiplying by NC and dividing by IT results in:

NC / (SCOPc x IT) = A / IT

Given: COEE = (A + IT) / IT = A/ IT + 1

By substitution:

COEE = (NC / (SCOPc x IT)) + 1

Rearranging:

COEE = (1 / SCOPc) x (NC/ IT) + 1

If the net cooling equals the IT power the relation is simplified:

COEEc = (1 / SCOPc) + 1

COEEc is introduced indicating that the value of COEE is calculated from SCOPc directly for the case that the net cooling equals the IT power.

Appendix G – Continued - Finding total energy savings (%) from SCOPc values.

For example – Going from a SCOPc value of 5 to 8 gives a 6.5% energy savings including all power needed for cooling and operating the IT equipment.

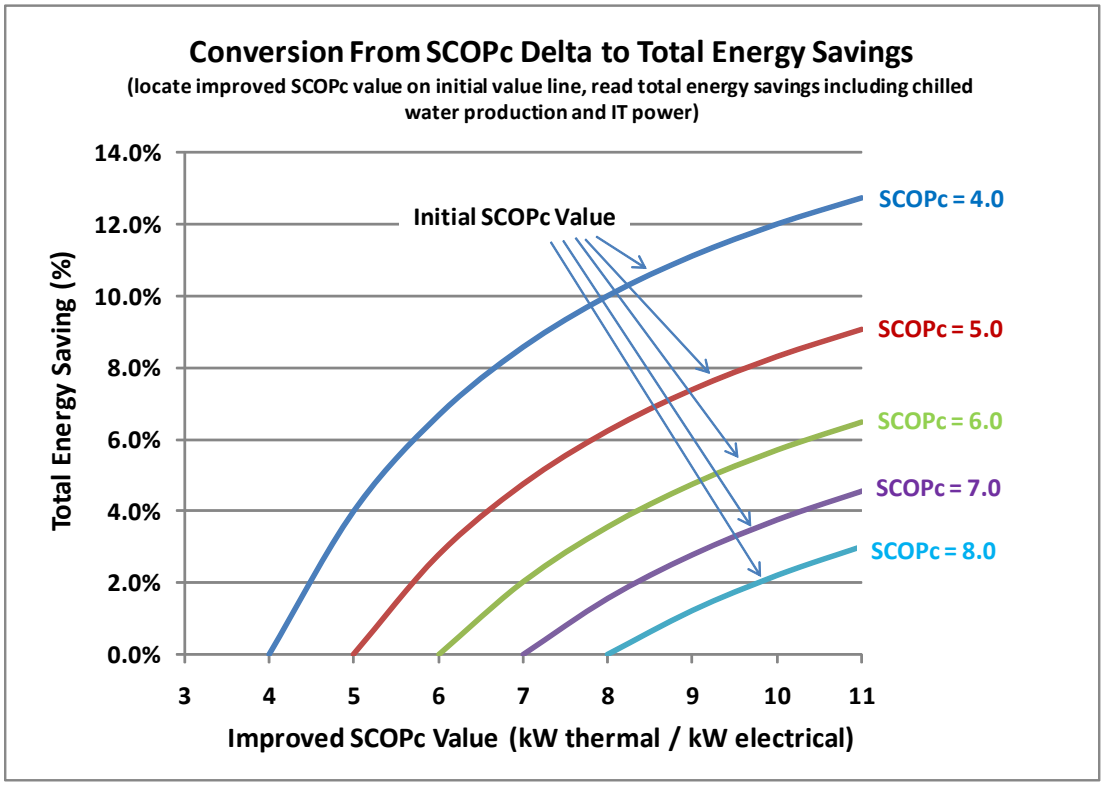

APPENDIX H: SCOPa results with CDU added

Water-to-water CDU uses 75 gpm on the facility side.

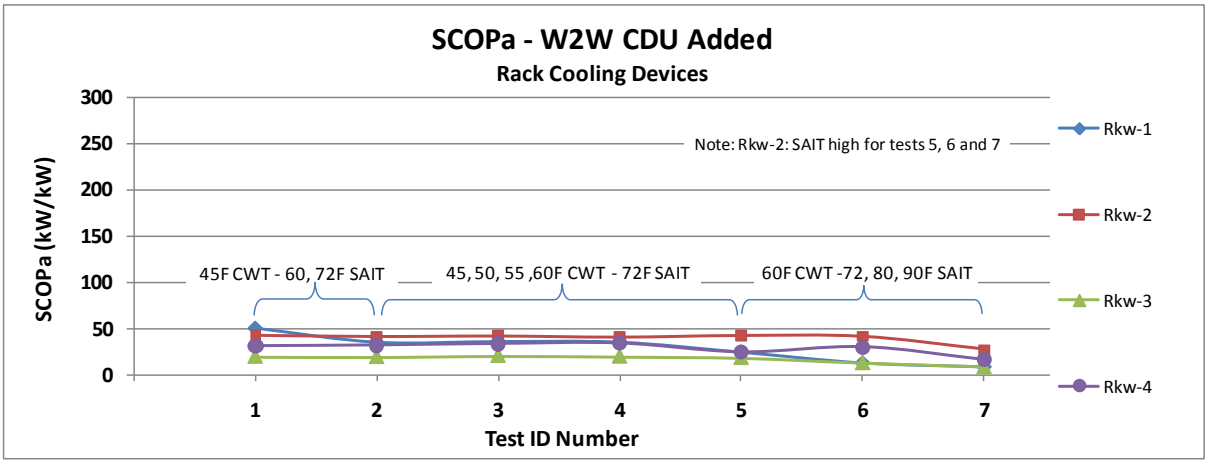

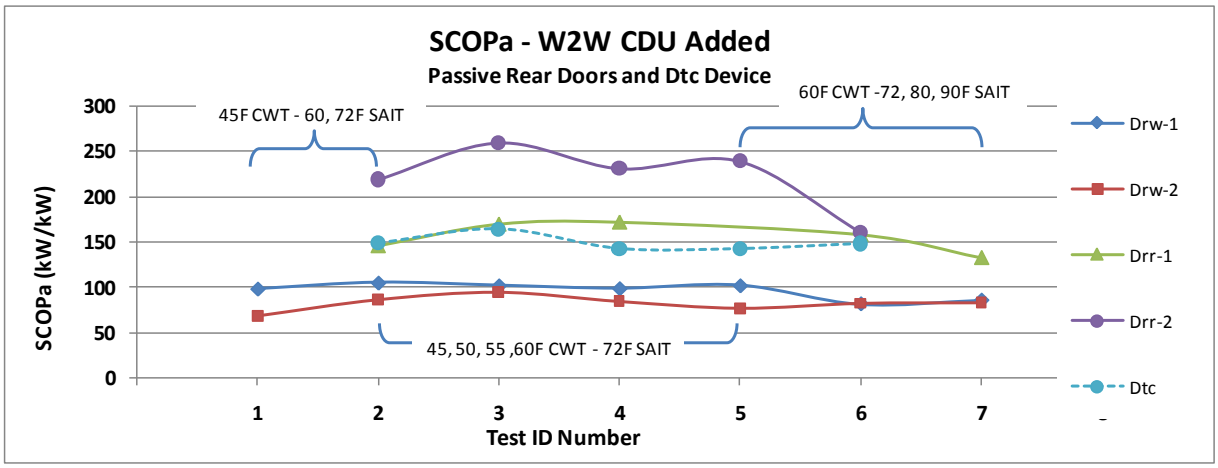

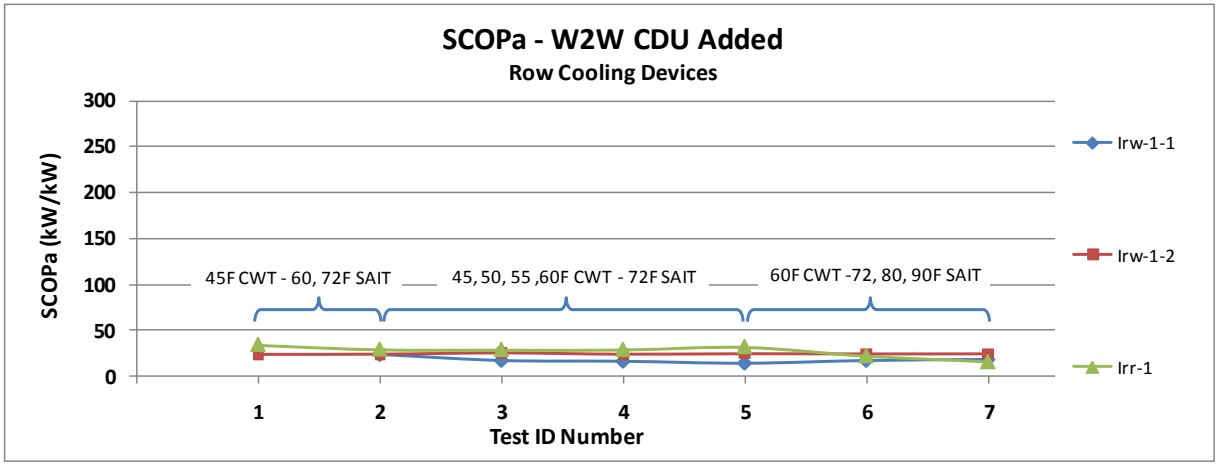

APPENDIX I: SCOPb results with CDU added

Water-to-water CDU uses 75 gpm on the facility side.

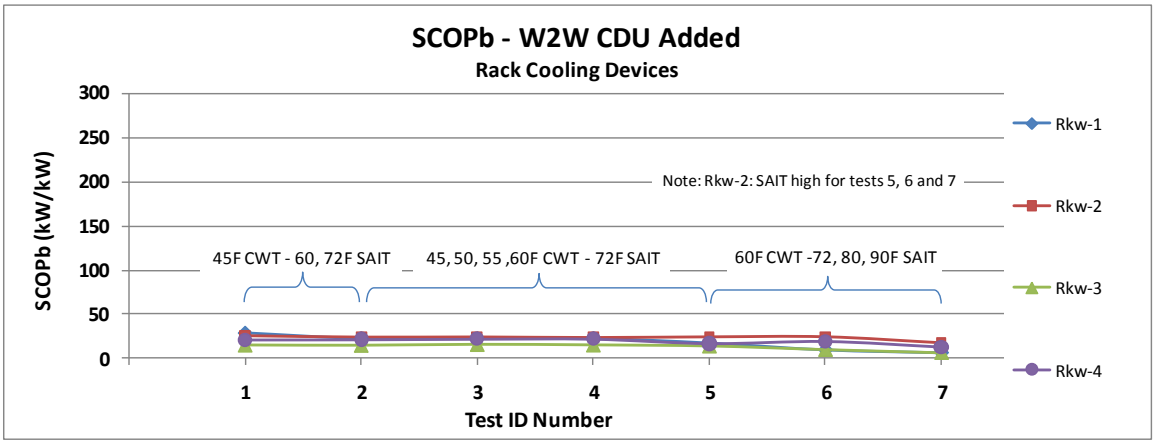

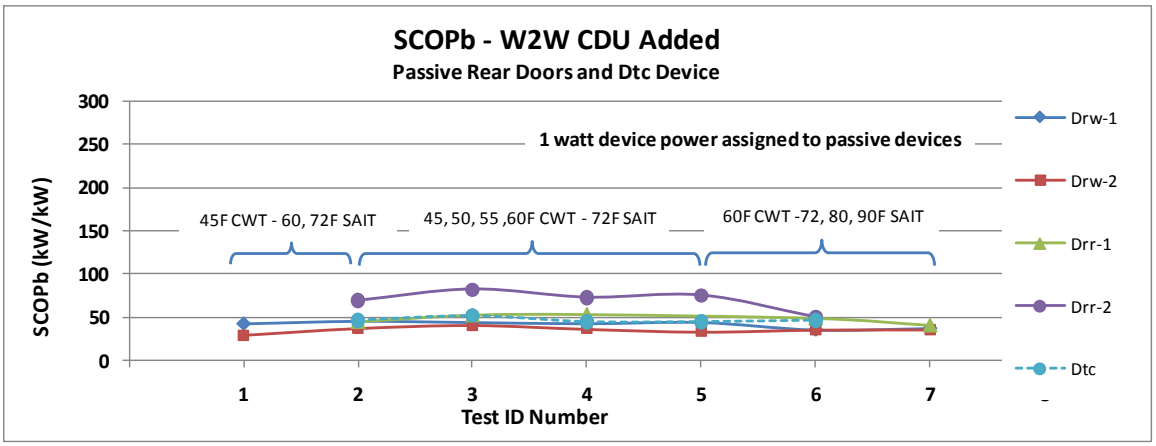

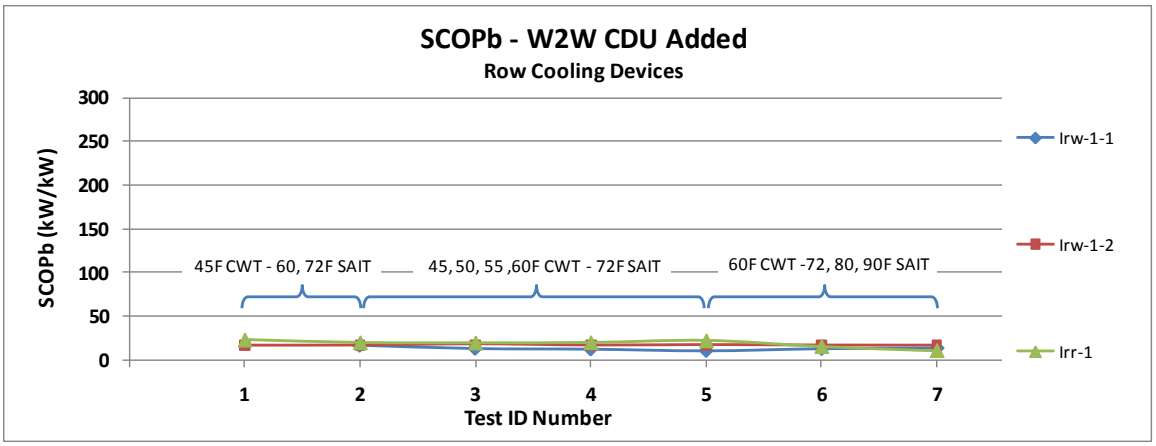

APPENDIX J: Calculated Data-CDU Added

Water-to-Water

CDU Added

75gpm facility side

Test ID# Ident.	UUT Water Cooling (kW)	UUT Water Cooling (tons)	Aux. Cooler Gross Cooling (kW)	Aux. Cooler Net Cooling (kW)	Feed Power (kW)	CDU Power (kW)	Device Power (kW)	Chilled W Plant-A Power (kW)	Chilled W Plant-B Power (kW)
1-Rkw-1	16.82	4.78	3.344	-0.344	0.228	0.175	0.153	2.54	2.48
2-Rkw-1	16.87	4.80	3.807	0.114	0.233	0.179	0.290	2.54	2.49
3-Rkw-1	16.39	4.66	3.892	0.203	0.234	0.180	0.268	2.15	2.11
4-Rkw-1	17.15	4.88	4.040	0.350	0.234	0.180	0.297	1.98	1.87
5-Rkw-1	17.77	5.05	3.603	-0.082	0.231	0.177	0.532	1.83	1.57
6-Rkw-1	16.80	4.78	3.900	0.214	0.233	0.179	1.078	1.73	1.47
7-Rkw-1	17.57	5.00	4.941	1.241	0.242	0.186	1.750	1.81	1.54
2-Irw1-1	104.75	29.79	-0.797	-4.295	1.724	1.325	2.916	15.79	15.46
3-Irw1-1	111.45	31.70	-0.679	-4.170	1.695	1.303	4.894	14.72	14.46
4-Irw1-1	106.54	30.30	-0.762	-4.254	1.706	1.311	4.915	12.10	11.26
5-Irw1-1	92.82	26.40	19.503	15.843	1.698	1.305	4.912	9.42	7.94
6-Irw1-1	113.40	32.25	-1.075	-4.546	1.827	1.404	4.911	11.31	9.33
7-Irw1-1	122.22	34.76	-1.453	-4.871	1.971	1.515	4.876	11.96	9.62
1-Irw1-2	103.99	29.58	1.524	-2.118	1.694	1.302	2.898	15.41	15.13
2-Irw1-2	104.97	29.85	-0.795	-4.283	1.708	1.313	2.882	15.77	15.45
3-Irw1-2	111.86	31.81	-0.587	-4.102	1.703	1.309	2.886	14.61	14.33
4-Irw1-2	105.06	29.88	-0.492	-4.002	1.704	1.310	2.898	11.86	10.99
5-Irw1-2	107.65	30.62	-0.824	-4.313	1.711	1.315	2.889	10.89	9.14
6-Irw1-2	108.08	30.74	-0.853	-4.307	1.815	1.395	2.872	11.15	9.57
7-Irw1-2	110.61	31.46	-1.013	-4.438	1.922	1.478	2.870	11.08	9.19
1-Irr-1	116.67	33.18	-0.571	-0.571	1.533	0.703	2.632	16.68	16.43
2-Irr-1	107.85	30.67	0.512	0.512	1.541	0.707	2.896	16.77	16.32
3-Irr-1	106.43	30.27	0.905	0.905	1.541	0.707	2.896	13.90	13.63
4-Irr-1	110.27	31.36	1.740	1.740	1.547	0.710	2.997	12.24	11.22
5-Irr-1	121.06	34.43	-0.398	-3.704	1.535	0.705	2.998	12.52	10.78
6-Irr-1	100.45	28.57	-0.680	-3.971	1.599	0.734	3.673	10.21	8.62
7-Irr-1	89.87	25.56	19.427	16.120	1.772	0.813	4.682	9.19	7.82
1-Drw-1	20.17	5.74	7.106	3.374	0.263	0.202	0.001	3.05	2.99
2-Drw-1	21.61	6.15	-0.665	-4.251	0.263	0.202	0.001	3.27	3.20
3-Drw-1	20.95	5.96	-0.693	-4.260	0.263	0.202	0.001	2.75	2.70
4-Drw-1	20.32	5.78	-0.695	-4.234	0.264	0.203	0.001	2.35	2.21
5-Drw-1	21.12	6.01	-0.677	-4.227	0.266	0.204	0.001	2.17	1.85
6-Drw-1	17.06	4.85	-0.838	-4.316	0.267	0.205	0.001	1.75	1.49
7-Drw-1	17.94	5.10	-1.201	-4.649	0.268	0.206	0.001	1.84	1.56
1-Rkw-2	15.89	4.52	3.586	-0.071	0.221	0.170	0.195	2.40	2.35
2-Rkw-2	15.56	4.43	4.753	1.079	0.241	0.185	0.184	2.35	2.30
3-Rkw-2	15.53	4.42	5.544	1.866	0.241	0.185	0.179	2.04	2.00
4-Rkw-2	15.21	4.33	5.085	1.408	0.241	0.185	0.182	1.76	1.65
5-Rkw-2	15.39	4.38	5.247	1.573	0.241	0.186	0.170	1.58	1.35
6-Rkw-2	8.41	2.39	4.230	0.560	0.127	0.097	0.101	0.86	0.74
7-Rkw-2	7.87	2.24	5.516	1.821	0.133	0.102	0.180	0.81	0.69
1-Rkw-3	13.82	3.93	1.694	-2.002	0.177	0.136	0.547	2.08	2.04
2-Rkw-3	13.78	3.92	2.248	-1.454	0.180	0.139	0.554	2.07	2.03
3-Rkw-3	14.54	4.13	2.814	-0.899	0.180	0.139	0.550	1.91	1.87
4-Rkw-3	14.17	4.03	2.773	-0.949	0.180	0.139	0.559	1.64	1.54
5-Rkw-3	13.01	3.70	2.872	-0.841	0.180	0.138	0.550	1.33	1.14
6-Rkw-3	13.50	3.84	3.406	-0.309	0.194	0.149	0.867	1.38	1.18
7-Rkw-3	14.26	4.05	3.337	-0.363	0.211	0.163	1.442	1.46	1.24
2-Drr-1	103.92	29.56	-0.099	-3.610	1.542	0.708	0.001	15.34	15.07
3-Drr-1	123.69	35.18	-0.244	-3.742	1.576	0.724	0.001	15.89	15.55
4-Drr-1	127.15	36.16	-0.269	-3.759	1.600	0.734	0.001	14.77	13.93
6-Drr-1	121.03	34.42	-0.424	-3.888	1.658	0.761	0.001	12.32	10.42
7-Drr-1	111.64	31.75	-0.647	-4.018	1.821	0.836	0.001	11.17	9.25
2-Drr-2	16.13	4.59	0.083	-3.387	0.157	0.072	0.001	2.35	2.31
3-Drr-2	18.17	5.17	0.048	-3.405	0.149	0.068	0.001	2.33	2.28
4-Drr-2	17.86	5.08	0.026	-3.438	0.165	0.076	0.001	2.01	1.86
5-Drr-2	18.63	5.30	-0.037	-3.490	0.167	0.077	0.001	1.83	1.48
6-Drr-2	20.09	5.71	1.624	-1.794	0.267	0.123	0.001	2.01	1.67
1-Drw-2	11.27	3.21	11.660	7.899	0.211	0.162	0.001	1.71	1.67
2-Drw-2	14.50	4.12	-0.147	-3.777	0.214	0.164	0.001	2.19	2.14
3-Drw-2	15.10	4.29	-0.281	-3.864	0.203	0.156	0.001	1.98	1.94
4-Drw-2	13.44	3.82	1.817	-1.801	0.204	0.157	0.001	1.55	1.46
5-Drw-2	12.37	3.52	2.935	-0.700	0.206	0.158	0.001	1.27	1.08
6-Drw-2	13.72	3.90	-0.316	-3.879	0.213	0.164	0.001	1.41	1.20
7-Drw-2	13.78	3.92	-0.294	-3.860	0.213	0.163	0.001	1.41	1.21
2-Dtc	10.67	3.04	1.565	-2.028	0.154	0.071	0.001	1.59	1.56
3-Dtc	11.94	3.40	0.749	-2.806	0.155	0.071	0.001	1.50	1.46
4-Dtc	10.43	2.97	2.534	-1.047	0.156	0.072	0.001	1.19	1.11
5-Dtc	10.45	2.97	3.075	-0.506	0.157	0.072	0.001	1.06	0.90
6-Dtc	10.87	3.09	-0.958	-4.465	0.157	0.072	0.001	1.08	0.89
1-Rkw-4	15.80	4.49	0.789	-2.826	0.207	0.159	0.338	2.38	2.33

APPENDIX K: Server Power vs. Temp. Inlet

Server power as a function of server air inlet temperature.

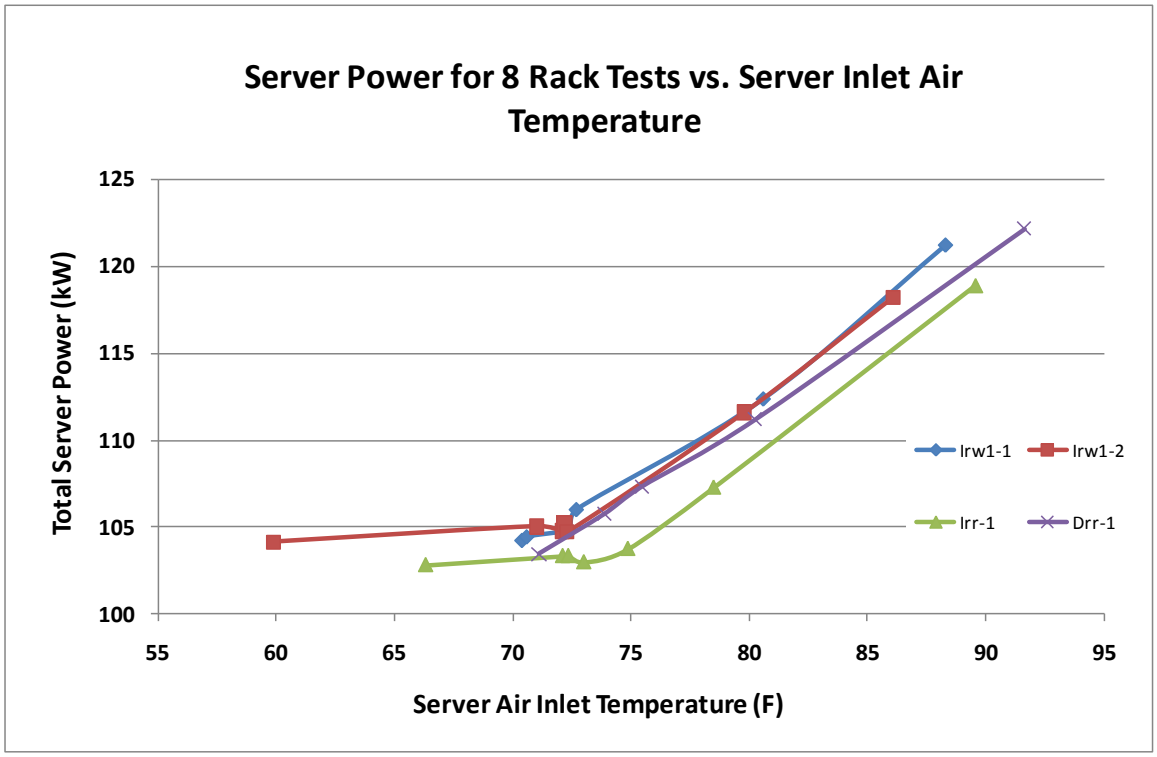

72F average power = 325, 80F average power = 345, no fan server = 290watts

72F fan power = 35.25watts, 80F = 55.5watts

10.8% fan power to 16.1% fan power, total server power increase = 6.2%

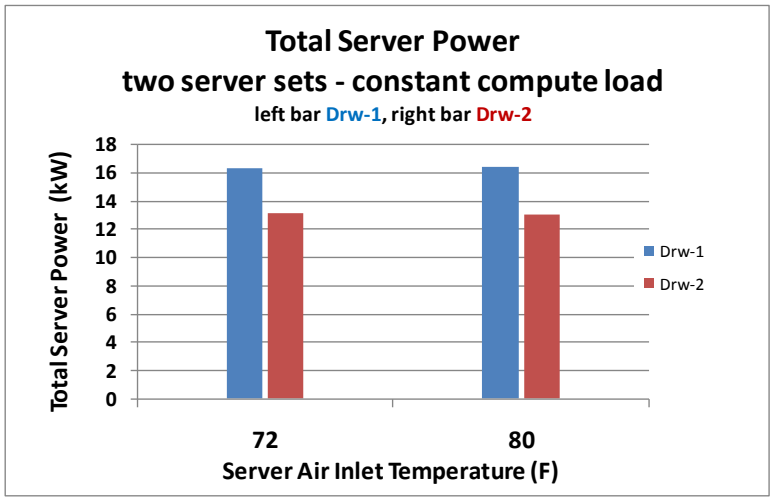

APPENDIX L: Chilled Water Plant A vs. Plant B for COEEc

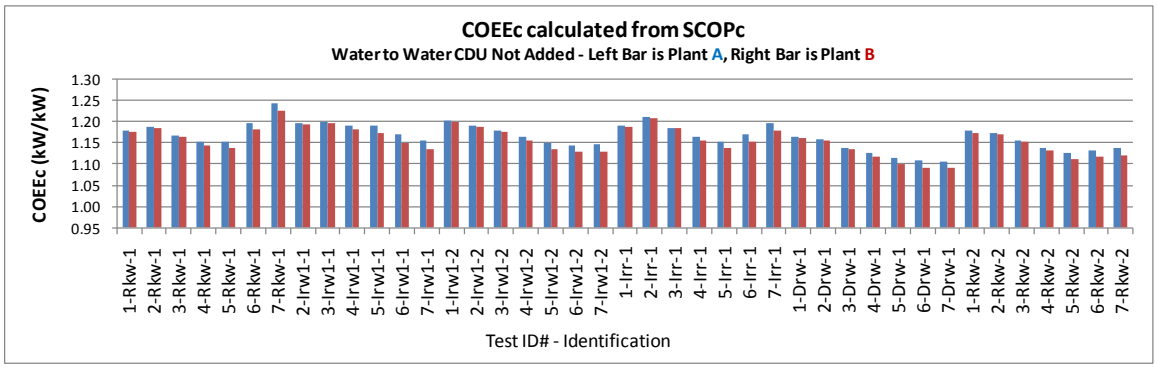

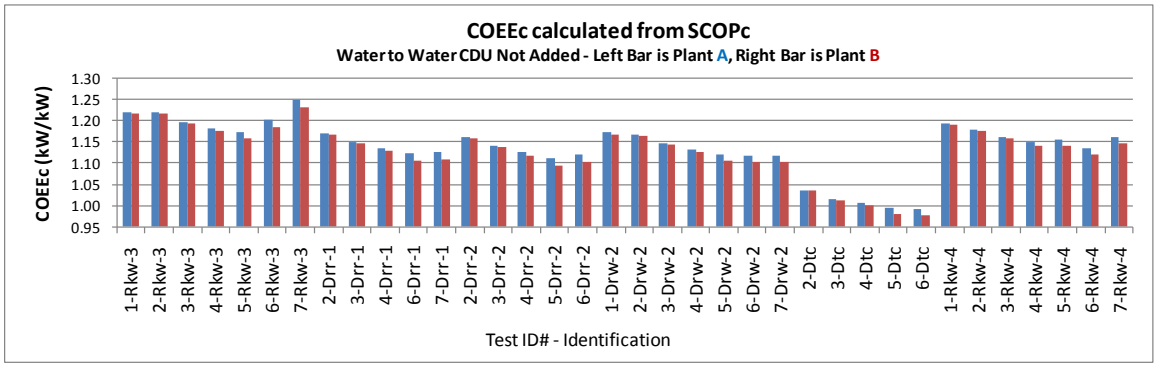

APPENDIX M: Kilowatts per Ton from SCOPa

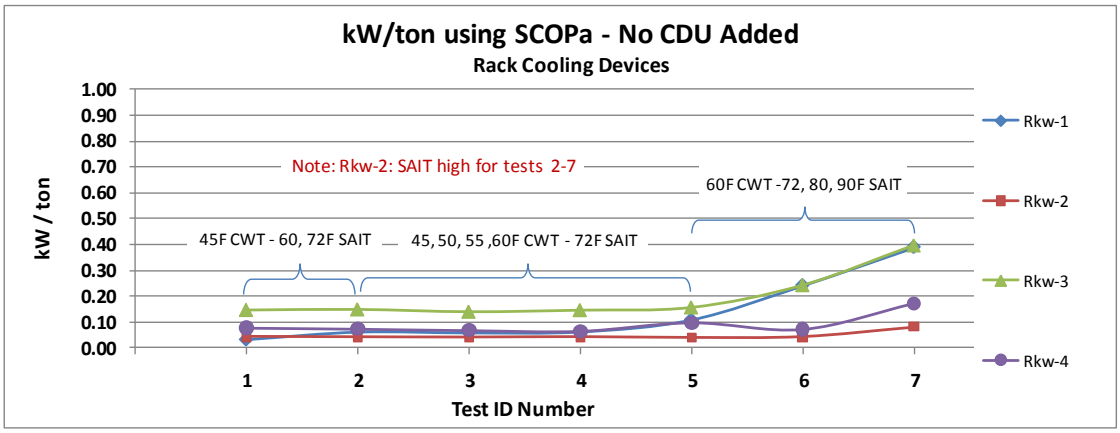

Note: Log scale to accommodate passive devices without CDU – 1 watt substituted for zero device power.

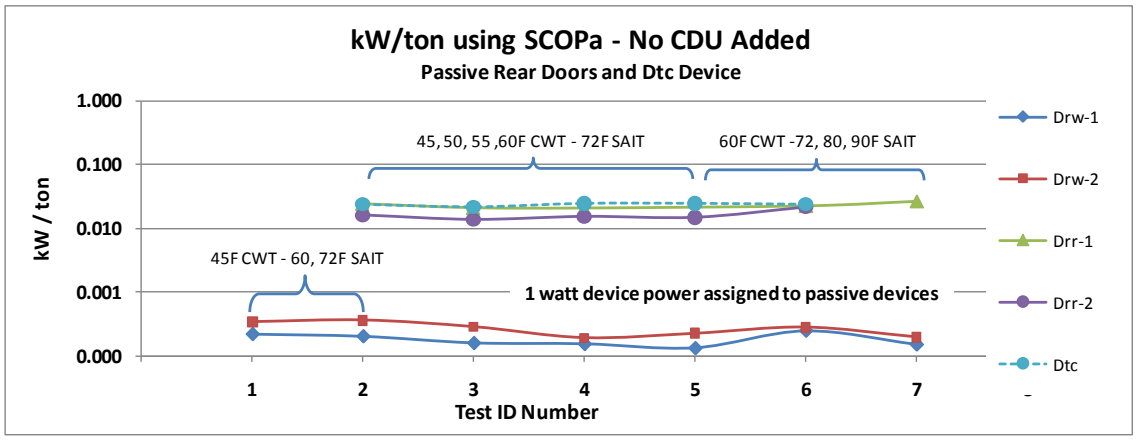

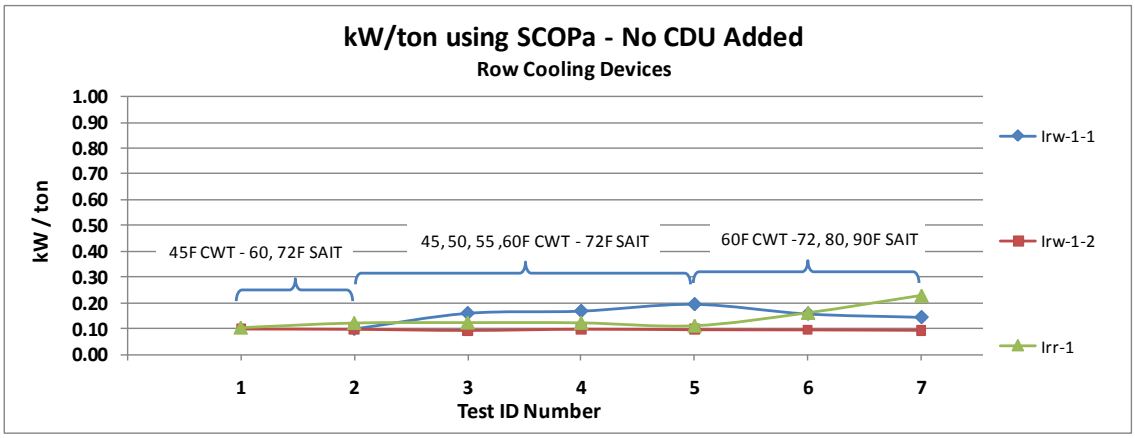

APPENDIX N: Final Results – CDU Added

Final Results

CDU Added

Water-to-water

CDU=75gpm

Facility side

COEE and

COEEc

Listed

Test ID# Ident.	$SCOP_a$	$SCOP_b$	$SCOP_C$ Plant A	$SCOP_C$ Plant B	COEEc Plant A	COEEc Plant B	COEE Plant A	COEE Plant B
1-Rkw-1	50	29	5.3	5.4	1.19	1.19	1.22	1.22
2-Rkw-1	35	23	5.0	5.1	1.20	1.20	1.23	1.22
3-Rkw-1	36	23	5.5	5.6	1.18	1.18	1.20	1.19
4-Rkw-1	35	23	6.1	6.4	1.16	1.16	1.19	1.18
5-Rkw-1	24	18	6.1	6.7	1.16	1.15	1.20	1.18
6-Rkw-1	12	10	4.8	5.2	1.21	1.19	1.22	1.21
7-Rkw-1	8	7	3.9	4.1	1.26	1.24	1.27	1.25
2-Irw1-1	24	17	4.5	4.6	1.22	1.22	1.21	1.20
3-Irw1-1	17	13	4.6	4.6	1.22	1.22	1.22	1.21
4-Irw1-1	16	12	4.9	5.1	1.20	1.19	1.19	1.18
5-Irw1-1	14	11	4.9	5.4	1.20	1.19	1.17	1.15
6-Irw1-1	17	13	5.4	6.0	1.18	1.17	1.17	1.16
7-Irw1-1	18	14	5.6	6.3	1.18	1.16	1.17	1.15
1-Irw1-2	24	17	4.6	4.7	1.22	1.21	1.20	1.20
2-Irw1-2	24	17	4.6	4.6	1.22	1.22	1.21	1.20
3-Irw1-2	26	18	5.2	5.2	1.19	1.19	1.20	1.19
4-Irw1-2	24	17	5.6	5.9	1.18	1.17	1.17	1.16
5-Irw1-2	25	17	6.1	6.8	1.17	1.15	1.16	1.14
6-Irw1-2	24	17	5.9	6.5	1.17	1.15	1.15	1.14
7-Irw1-2	24	17	6.0	6.8	1.17	1.15	1.15	1.13
1-Irr-1	34	23	5.2	5.2	1.19	1.19	1.21	1.21
2-Irr-1	29	20	4.7	4.8	1.21	1.21	1.21	1.21
3-Irr-1	29	20	5.3	5.4	1.19	1.19	1.18	1.18
4-Irr-1	29	20	6.0	6.4	1.17	1.16	1.17	1.16
5-Irr-1	32	22	6.5	7.2	1.15	1.14	1.17	1.16
6-Irr-1	22	16	5.8	6.5	1.17	1.15	1.15	1.14
7-Irr-1	15	11	5.0	5.5	1.20	1.18	1.14	1.13
1-Drw-1	98	42	5.6	5.7	1.18	1.18	1.22	1.21
2-Drw-1	105	45	5.6	5.8	1.18	1.17	1.23	1.23
3-Drw-1	102	44	6.4	6.5	1.16	1.15	1.20	1.20
4-Drw-1	99	42	7.0	7.4	1.14	1.13	1.17	1.17
5-Drw-1	102	44	7.8	8.9	1.13	1.11	1.16	1.14
6-Drw-1	82	35	7.5	8.5	1.13	1.12	1.14	1.12
7-Drw-1	86	37	7.6	8.6	1.13	1.12	1.14	1.12
1-Rkw-2	43	26	5.1	5.2	1.19	1.19	1.22	1.22
2-Rkw-2	41	25	5.1	5.1	1.20	1.19	1.20	1.20
3-Rkw-2	42	25	5.6	5.7	1.18	1.17	1.18	1.18
4-Rkw-2	40	24	6.2	6.5	1.16	1.15	1.16	1.15
5-Rkw-2	42	25	6.8	7.6	1.15	1.13	1.15	1.13
6-Rkw-2	41	25	6.8	7.6	1.15	1.13	1.15	1.14
7-Rkw-2	27	18	6.1	6.7	1.16	1.15	1.15	1.14
1-Rkw-3	19	15	4.4	4.5	1.23	1.22	1.27	1.27
2-Rkw-3	19	15	4.4	4.4	1.23	1.22	1.27	1.26
3-Rkw-3	20	16	4.9	5.0	1.20	1.20	1.25	1.25
4-Rkw-3	19	15	5.3	5.5	1.19	1.18	1.23	1.22
5-Rkw-3	18	14	5.5	6.1	1.18	1.17	1.20	1.18
6-Rkw-3	12	10	4.7	5.1	1.21	1.19	1.22	1.20
7-Rkw-3	8	7	3.8	4.1	1.26	1.25	1.25	1.23
2-Drr-1	146	45	5.8	5.9	1.17	1.17	1.17	1.17
3-Drr-1	170	53	6.7	6.8	1.15	1.15	1.17	1.17
4-Drr-1	172	53	7.3	7.7	1.14	1.13	1.16	1.15
6-Drr-1	158	49	8.0	9.2	1.12	1.11	1.13	1.12
7-Drr-1	132	41	7.9	9.2	1.13	1.11	1.11	1.10
2-Drr-2	219	69	6.2	6.3	1.16	1.16	1.25	1.24
3-Drr-2	260	82	7.0	7.2	1.14	1.14	1.26	1.25
4-Drr-2	231	73	7.8	8.4	1.13	1.12	1.20	1.19
5-Drr-2	240	75	8.9	10.7	1.11	1.09	1.19	1.15
6-Drr-2	161	50	8.2	9.6	1.12	1.10	1.13	1.11
1-Drw-2	68	29	5.2	5.3	1.19	1.19	1.16	1.16
2-Drw-2	86	37	5.5	5.6	1.18	1.18	1.20	1.19
3-Drw-2	95	41	6.3	6.4	1.16	1.16	1.19	1.18
4-Drw-2	84	36	6.8	7.2	1.15	1.14	1.15	1.15
5-Drw-2	77	33	7.3	8.3	1.14	1.12	1.13	1.11
6-Drw-2	82	35	7.5	8.5	1.13	1.12	1.14	1.12
7-Drw-2	83	36	7.5	8.5	1.13	1.12	1.14	1.12
2-Dtc	149	46	5.8	5.9	1.04	1.04	1.04	1.04
3-Dtc	164	52	6.8	6.9	1.02	1.01	1.03	1.03
4-Dtc	143	45	7.2	7.6	1.01	1.00	1.00	1.00
5-Dtc	143	45	7.9	9.1	1.00	0.98	0.99	0.98
6-Dtc	148	46	8.1	9.5	0.99	0.98	1.00	0.98
1-Rkw-4	31	21	4.9	5.0	1.20	1.20	1.24	1.24
2-Rkw-4	32	22	4.9	5.0	1.20	1.20	1.23	1.23
3-Rkw-4	33	22	5.5	5.6	1.18	1.18	1.21	1.21
4-Rkw-4	34	22	6.0	6.3	1.17	1.16	1.18	1.18

APPENDIX O: Final Results – CDU Not Added

Final Results

CDU Not Added

COEE and

COEEc

Listed

Test ID# Ident.	$SCOP_a$	$SCOP_b$	$SCOP_C$ Plant A	$SCOP_C$ Plant B	COEEc Plant A	COEEc Plant B	COEE Plant A	COEE Plant B
1-Rkw-1	109	42	5.6	5.7	1.18	1.18	1.21	1.21
2-Rkw-1	57	31	5.3	5.4	1.19	1.18	1.21	1.21
3-Rkw-1	60	31	6.0	6.1	1.17	1.16	1.19	1.18
4-Rkw-1	57	31	6.6	6.9	1.15	1.14	1.18	1.17
5-Rkw-1	32	22	6.5	7.3	1.15	1.14	1.18	1.17
6-Rkw-1	15	12	5.1	5.5	1.20	1.18	1.21	1.19
7-Rkw-1	9	8	4.1	4.4	1.24	1.23	1.25	1.24
2-Irw1-1	35	26	5.1	5.2	1.20	1.19	1.19	1.18
3-Irw1-1	22	17	5.0	5.1	1.20	1.20	1.20	1.20
4-Irw1-1	21	15	5.3	5.5	1.19	1.18	1.18	1.17
5-Irw1-1	18	13	5.3	5.8	1.19	1.17	1.16	1.14
6-Irw1-1	22	16	5.9	6.7	1.17	1.15	1.16	1.14
7-Irw1-1	24	20	6.5	7.5	1.15	1.13	1.15	1.13
1-Irw1-2	35	22	5.0	5.0	1.20	1.20	1.19	1.19
2-Irw1-2	35	29	5.3	5.3	1.19	1.19	1.18	1.18
3-Irw1-2	38	24	5.6	5.7	1.18	1.18	1.18	1.18
4-Irw1-2	35	22	6.1	6.5	1.16	1.16	1.16	1.15
5-Irw1-2	36	22	6.6	7.5	1.15	1.13	1.15	1.13
6-Irw1-2	37	28	7.0	7.8	1.14	1.13	1.13	1.12
7-Irw1-2	38	24	6.9	7.8	1.15	1.13	1.13	1.11
1-Irr-1	34	23	5.2	5.2	1.19	1.19	1.21	1.21
2-Irr-1	29	20	4.7	4.8	1.21	1.21	1.21	1.21
3-Irr-1	29	20	5.3	5.4	1.19	1.19	1.18	1.18
4-Irr-1	29	20	6.0	6.4	1.17	1.16	1.17	1.16
5-Irr-1	32	22	6.5	7.2	1.15	1.14	1.17	1.16
6-Irr-1	22	16	5.8	6.5	1.17	1.15	1.15	1.14
7-Irr-1	15	11	5.0	5.5	1.20	1.18	1.14	1.13
1-Drw-1	16161	97	6.1	6.2	1.16	1.16	1.20	1.20
2-Drw-1	17503	194	6.3	6.5	1.16	1.15	1.21	1.20
3-Drw-1	22250	158	7.2	7.4	1.14	1.14	1.18	1.17
4-Drw-1	22986	114	8.0	8.4	1.13	1.12	1.16	1.15
5-Drw-1	26642	95	8.7	10.1	1.11	1.10	1.15	1.13
6-Drw-1	14338	222	9.3	10.8	1.11	1.09	1.11	1.10
7-Drw-1	23384	260	9.4	10.9	1.11	1.09	1.12	1.10
1-Rkw-2	81	43	5.6	5.7	1.18	1.17	1.20	1.20
2-Rkw-2	84	53	5.8	5.9	1.17	1.17	1.18	1.17
3-Rkw-2	86	50	6.5	6.6	1.15	1.15	1.16	1.16
4-Rkw-2	83	47	7.2	7.6	1.14	1.13	1.14	1.13
5-Rkw-2	90	46	7.9	9.0	1.13	1.11	1.13	1.11
6-Rkw-2	82	38	7.6	8.6	1.13	1.12	1.14	1.12
7-Rkw-2	43	32	7.3	8.2	1.14	1.12	1.13	1.11
1-Rkw-3	24	17	4.5	4.6	1.22	1.22	1.26	1.26
2-Rkw-3	24	16	4.5	4.6	1.22	1.22	1.26	1.25
3-Rkw-3	25	17	5.1	5.2	1.20	1.19	1.24	1.24
4-Rkw-3	24	17	5.5	5.7	1.18	1.17	1.22	1.21
5-Rkw-3	23	16	5.8	6.4	1.17	1.16	1.19	1.17
6-Rkw-3	15	11	5.0	5.4	1.20	1.18	1.21	1.19
7-Rkw-3	9	7	4.0	4.3	1.25	1.23	1.24	1.22
2-Drr-1	146	45	5.8	5.9	1.17	1.17	1.17	1.17
3-Drr-1	170	53	6.7	6.8	1.15	1.15	1.17	1.17
4-Drr-1	172	53	7.3	7.7	1.14	1.13	1.16	1.15
6-Drr-1	158	49	8.0	9.2	1.12	1.11	1.13	1.12
7-Drr-1	132	41	7.9	9.2	1.13	1.11	1.11	1.10
2-Drr-2	219	69	6.2	6.3	1.16	1.16	1.25	1.24
3-Drr-2	260	82	7.0	7.2	1.14	1.14	1.26	1.25
4-Drr-2	231	73	7.8	8.4	1.13	1.12	1.20	1.19
5-Drr-2	240	75	8.9	10.7	1.11	1.09	1.19	1.15
6-Drr-2	161	50	8.2	9.6	1.12	1.10	1.13	1.11
1-Drw-2	10334	56	5.8	5.9	1.17	1.17	1.15	1.14
2-Drw-2	9731	73	6.0	6.1	1.17	1.16	1.18	1.18
3-Drw-2	12376	76	6.8	7.0	1.15	1.14	1.17	1.17
4-Drw-2	18401	68	7.6	8.0	1.13	1.12	1.14	1.13
5-Drw-2	15749	62	8.3	9.5	1.12	1.11	1.12	1.10
6-Drw-2	12570	69	8.4	9.7	1.12	1.10	1.12	1.11
7-Drw-2	17855	69	8.4	9.7	1.12	1.10	1.12	1.11
2-Dtc	149	46	5.8	5.9	1.04	1.04	1.04	1.04
3-Dtc	164	52	6.8	6.9	1.02	1.01	1.03	1.03
4-Dtc	143	45	7.2	7.6	1.01	1.00	1.00	1.00
5-Dtc	143	45	7.9	9.1	1.00	0.98	0.99	0.98
6-Dtc	148	46	8.1	9.5	0.99	0.98	1.00	0.98
1-Rkw-4	46	27	5.2	5.3	1.19	1.19	1.23	1.23
2-Rkw-4	48	39	5.6	5.7	1.18	1.18	1.21	1.21
3-Rkw-4	52	38	6.2	6.3	1.16	1.16	1.19	1.18
4-Rkw-4	54	34	6.7	7.1	1.15	1.14	1.17	1.16