DC Voltage Level Overview

Annabelle Pratt
Corporate Technology Group

"If I have seen further it is by standing on ye shoulders of Giants."
Isaac Newton

July 12, 2007

Data center power distribution

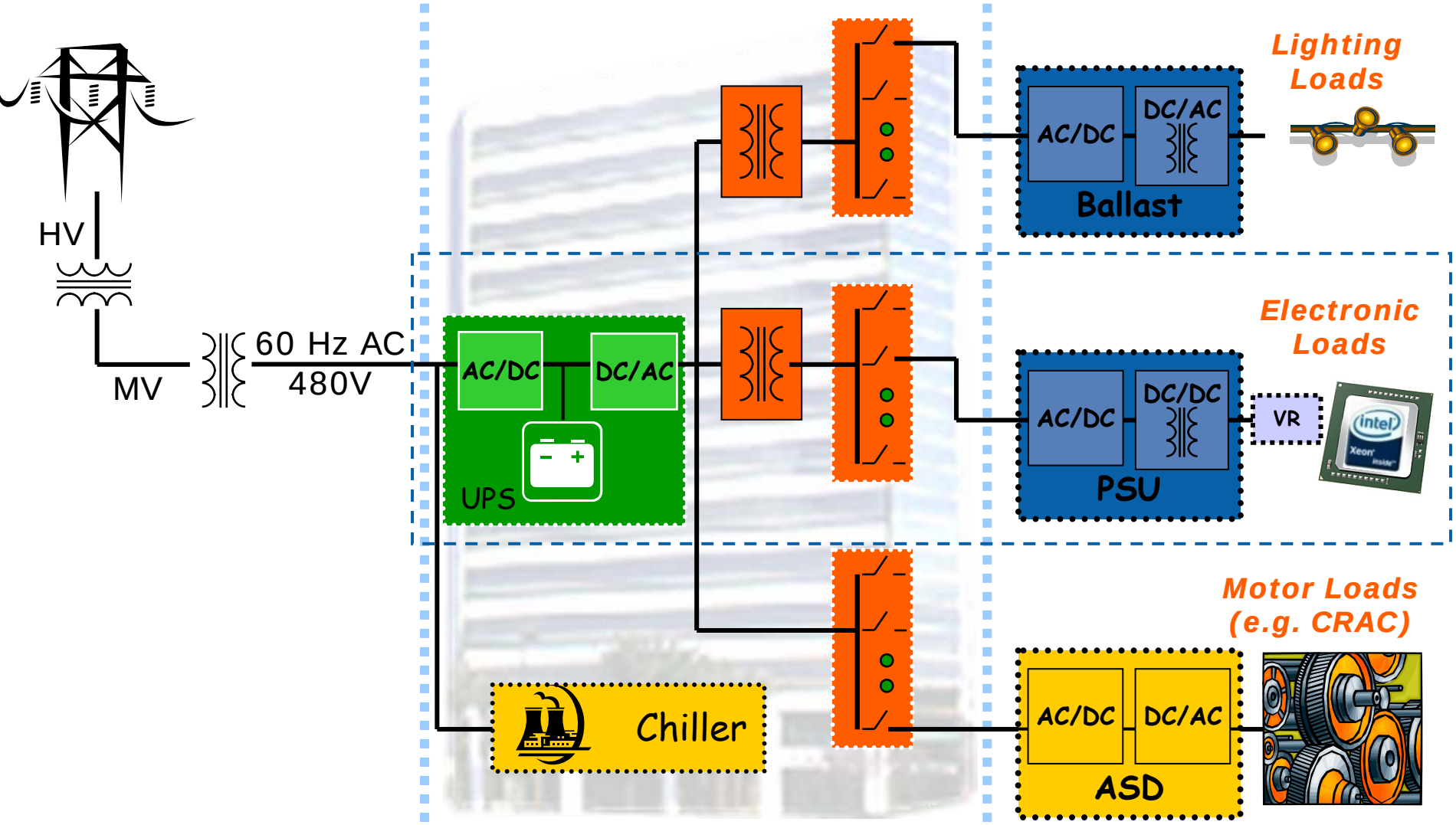

ASD : Adjustable Speed Drive
CRAC : Computer Room Air Conditioner

Power distribution with DG

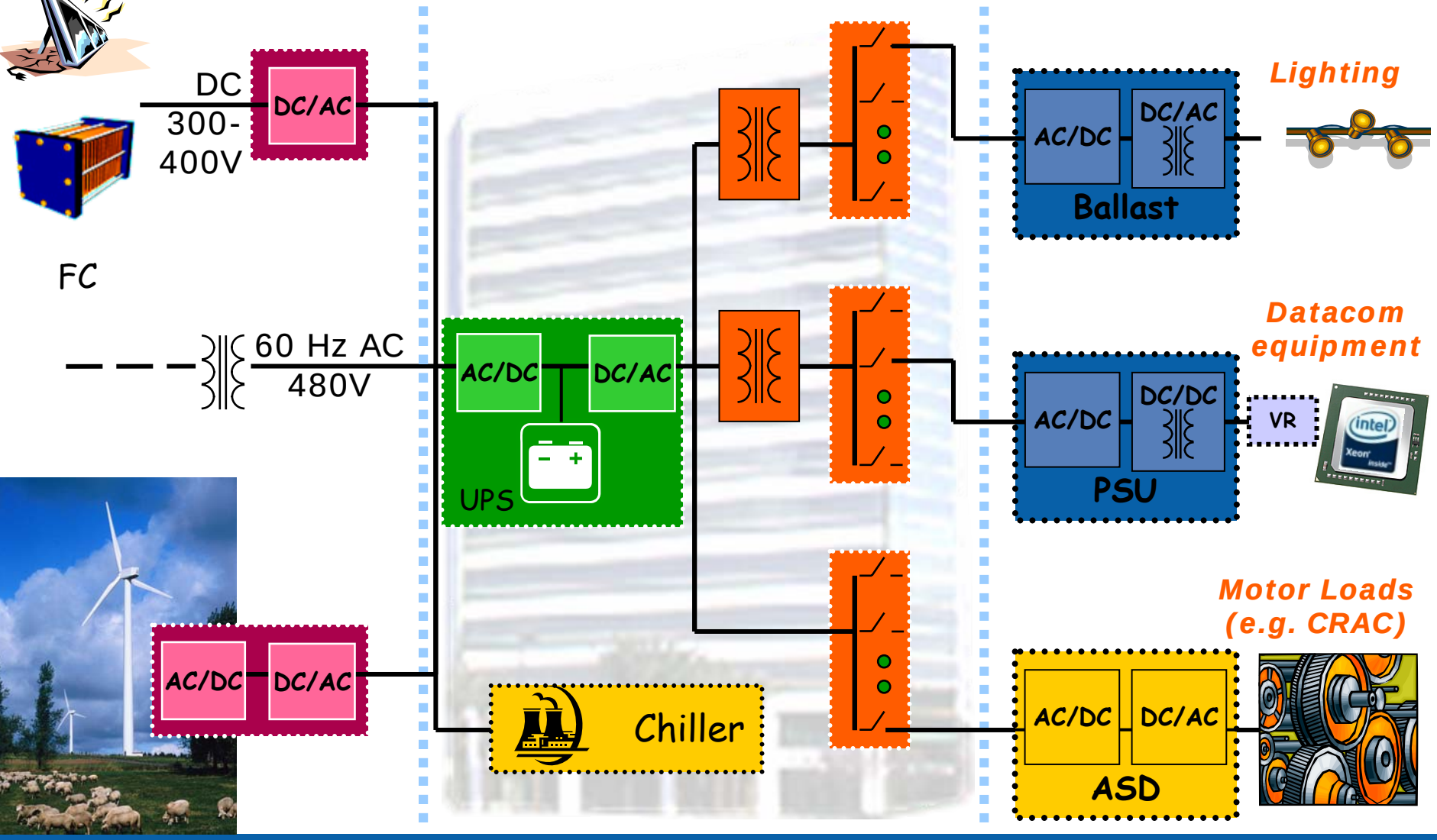

PV : Photo Voltaic
FC : Fuel Cell

Moving towards a DC facility

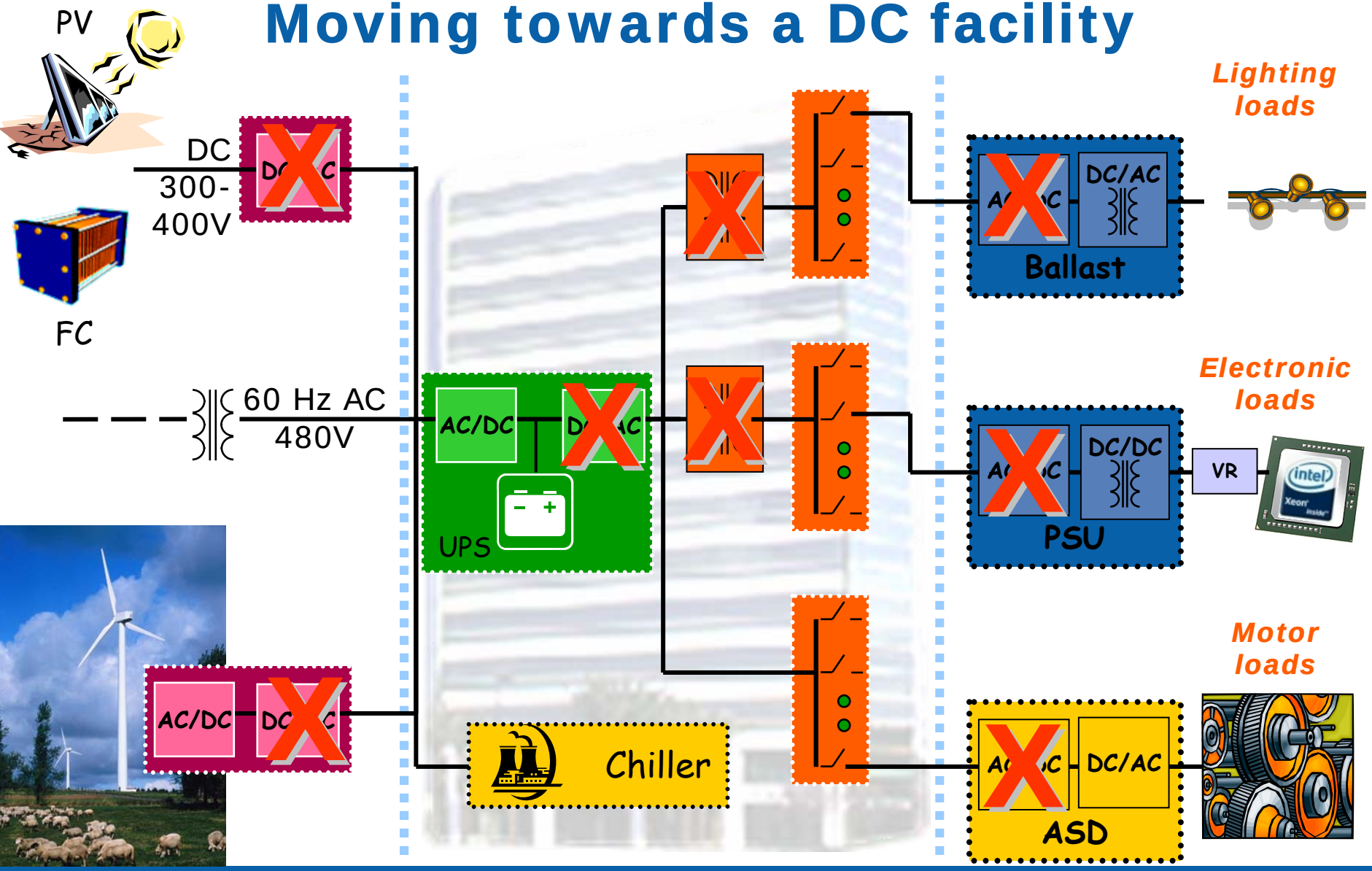

Moving towards a DC facility

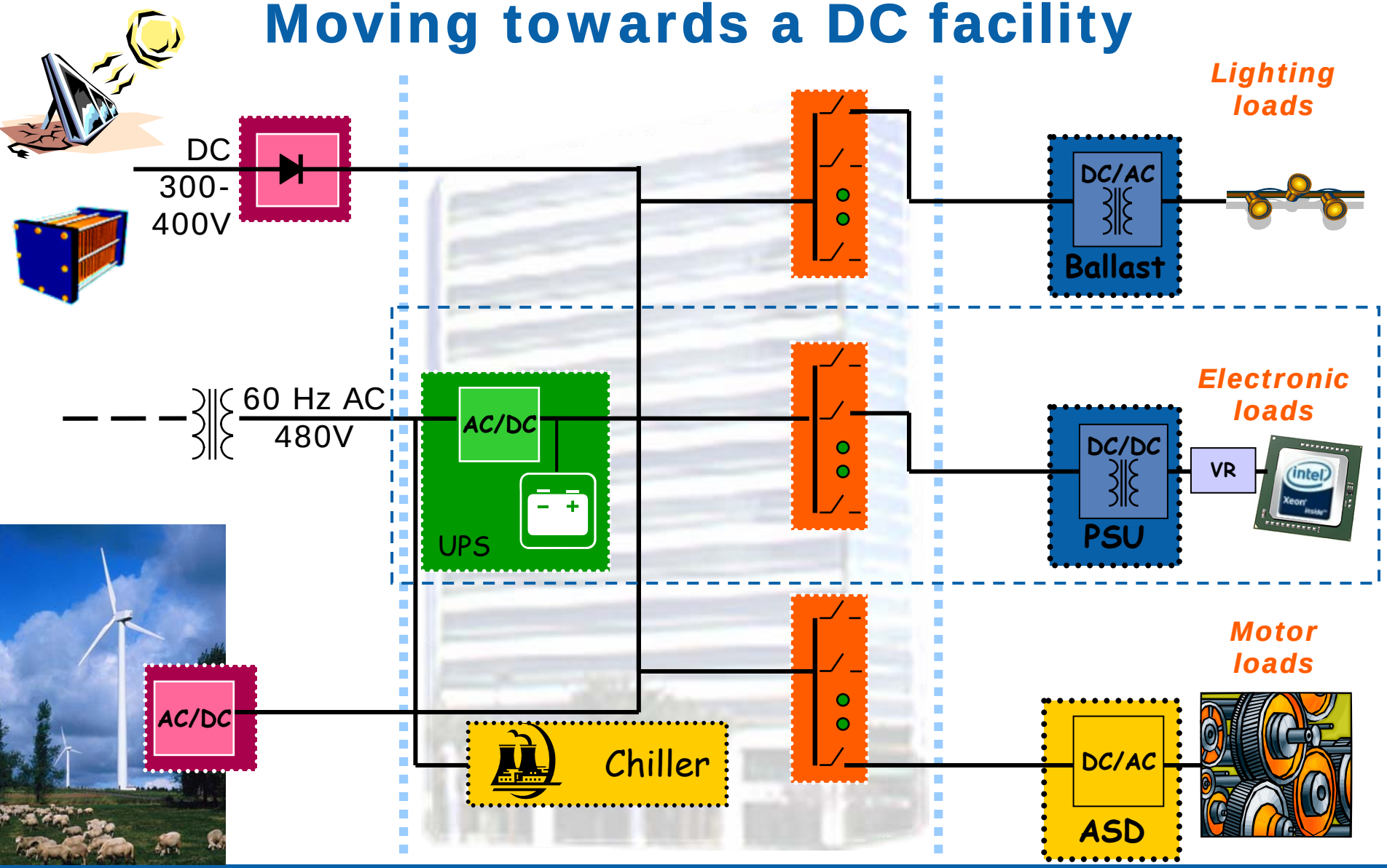

What DC voltage level should be used?

Conventional AC (US)

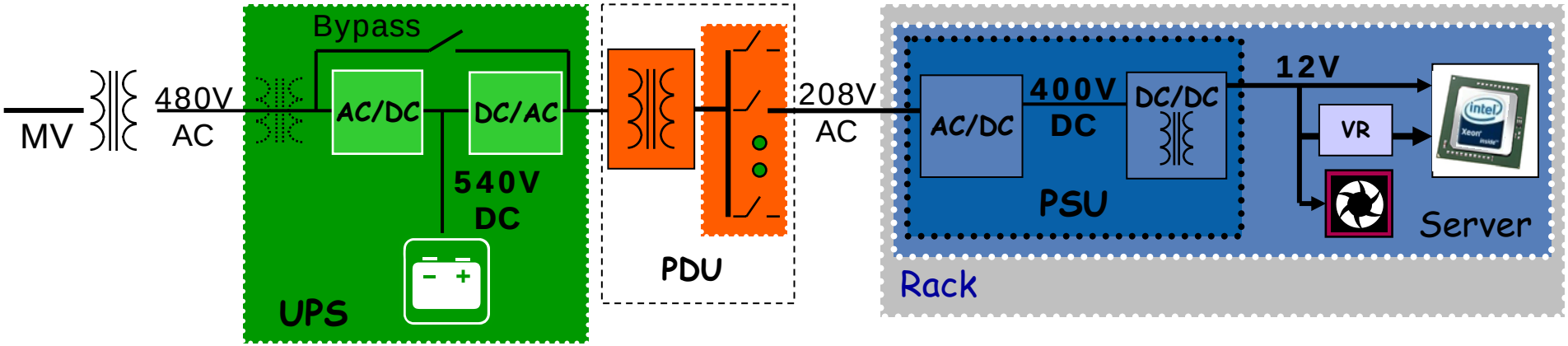

- High efficiency components : reduces input power by 30%
  - For PSU, can recoup higher cost of high efficiency unit in < 1 year

AC in facility, DC at rack level

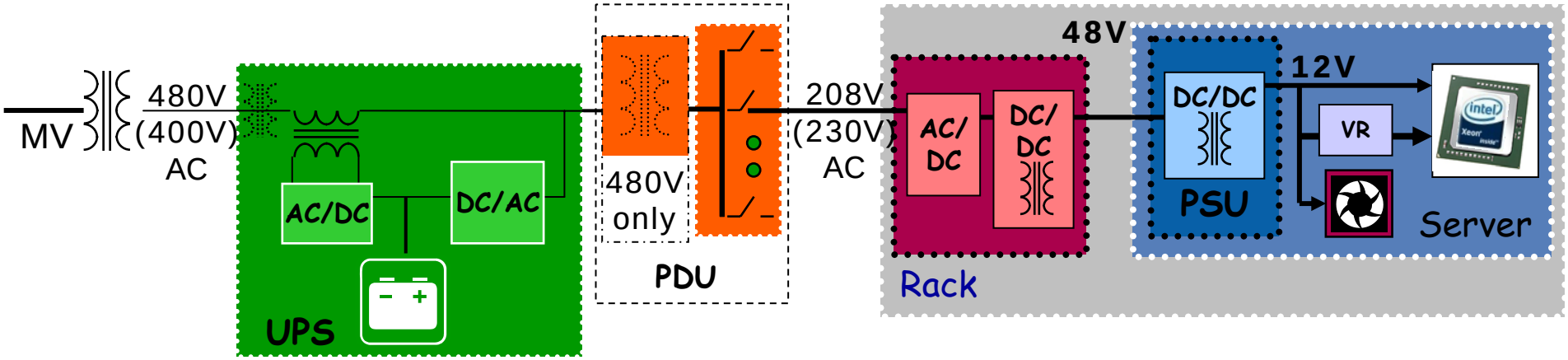

- High efficiency AC distribution, including specialized UPS
- Same number of conversion stages as AC distribution
- Benefits from reduced heat in server, smaller PSU

Facility-level DC

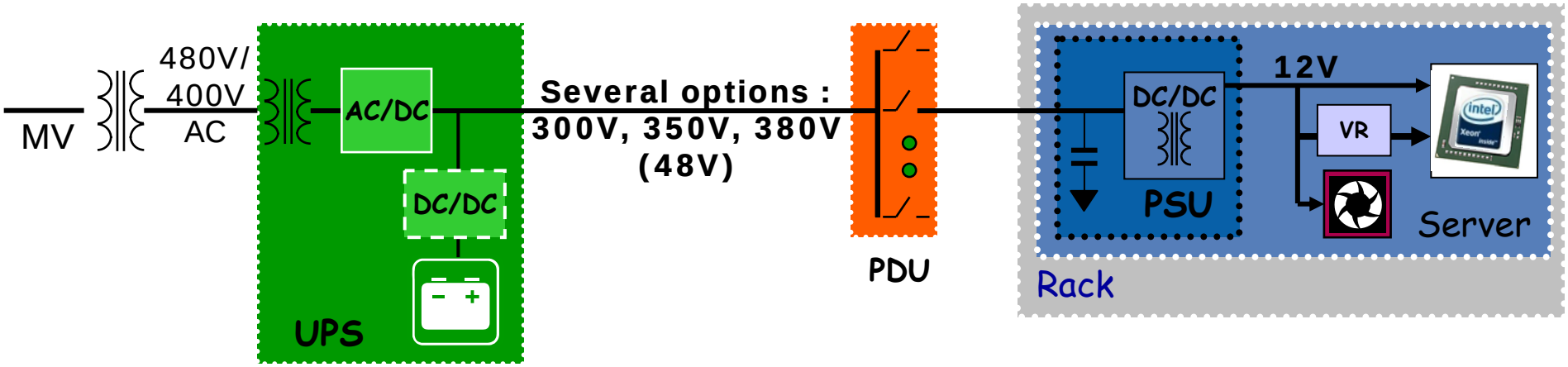

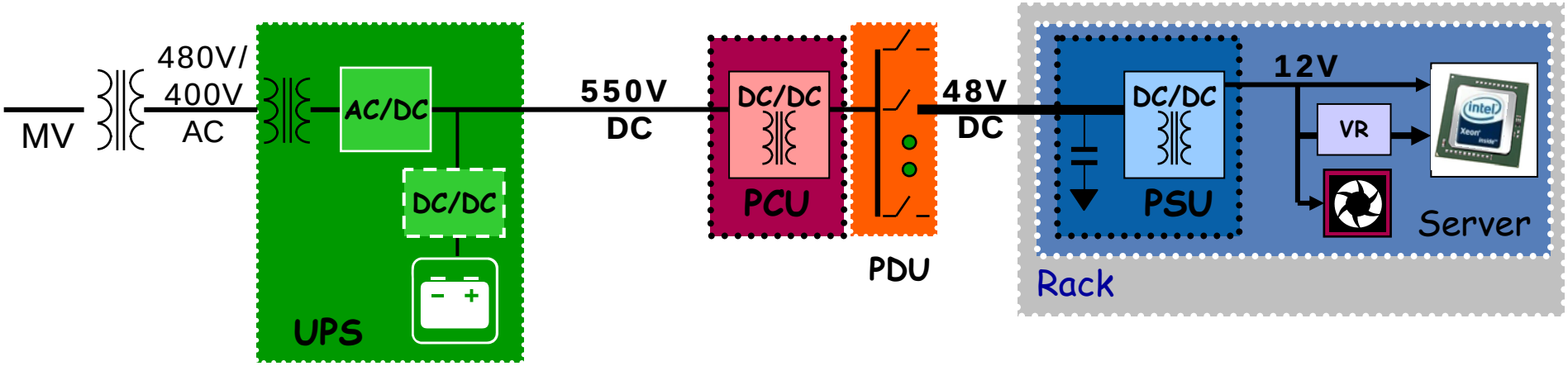

400V DC Data Center demonstration

Summer 2006 : Lawrence Berkeley National Laboratory (LBNL) and multiple industry partners

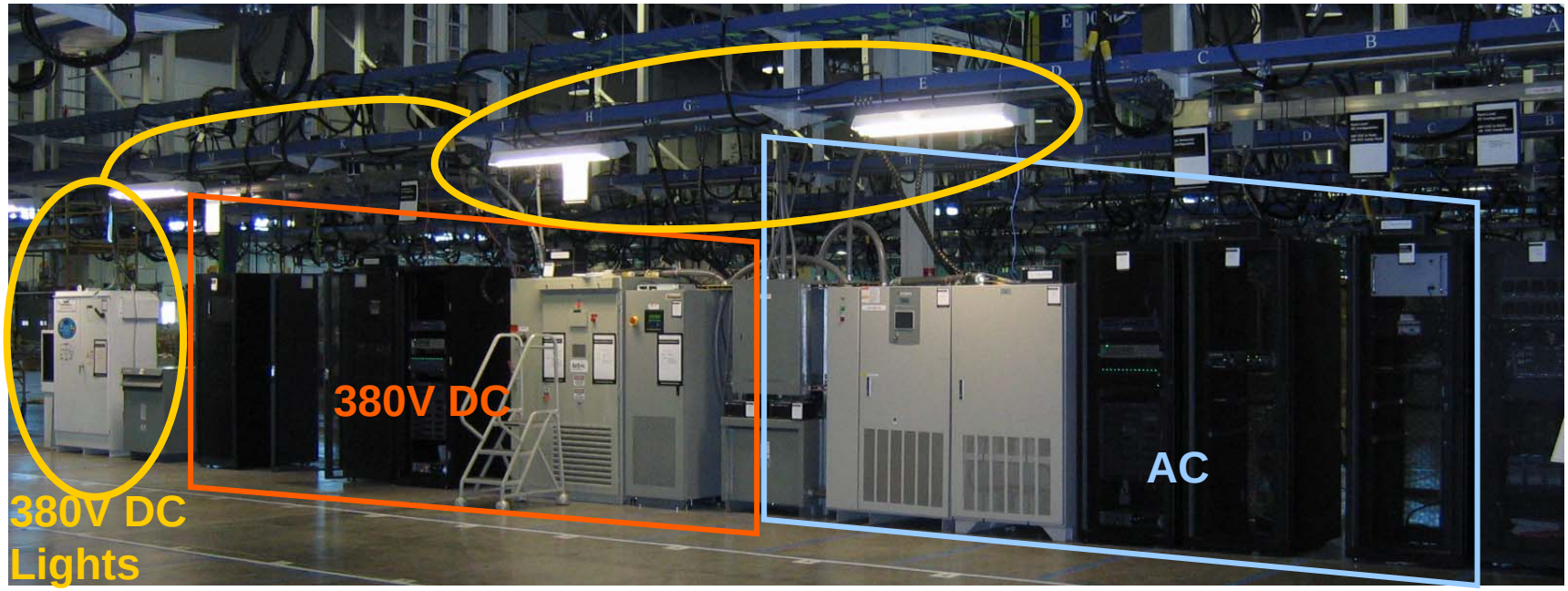

- Compared High efficiency AC to 380V DC
  - **7% energy consumption savings**
- Demonstrated operational servers with 380V DC input
  - Modified commercially available AC input server power supplies
  - Used PV inverter for DC UPS

Speakers

- Mike Bushue, *Sun Microsystems* : 380V
- Keiichi Hirose, *NTT Facilities* : 300V (Sendai project)
- Stefan Lidstrom, *Netpower Labs* : 350V
- Rudy Kraus, *Validus DC Systems* : 550V/48V

- Bharat Shah, *Emerson* representing *PSMA* : impact of voltage on power supply design

DC for Data Center Workshop

DC voltage Panel Presentation

Mike Bushue
Sr Staff Engineer
07/12/2007

Architectures

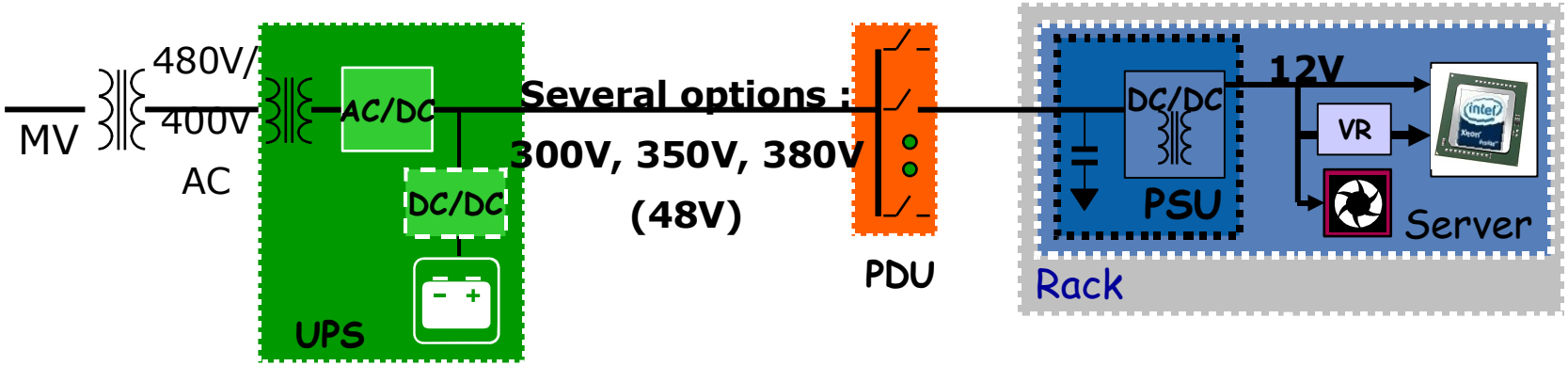

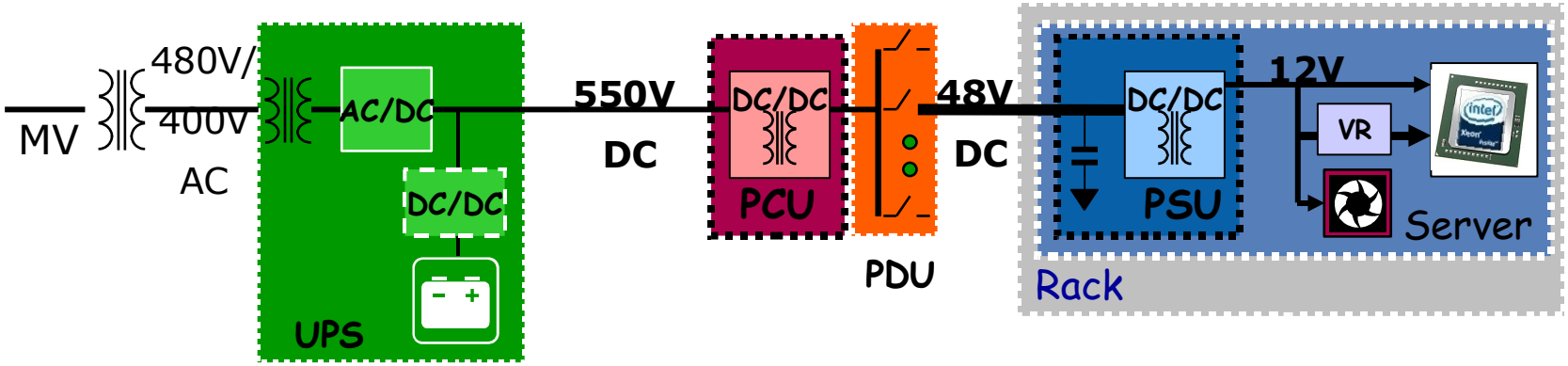

Drivers for technology

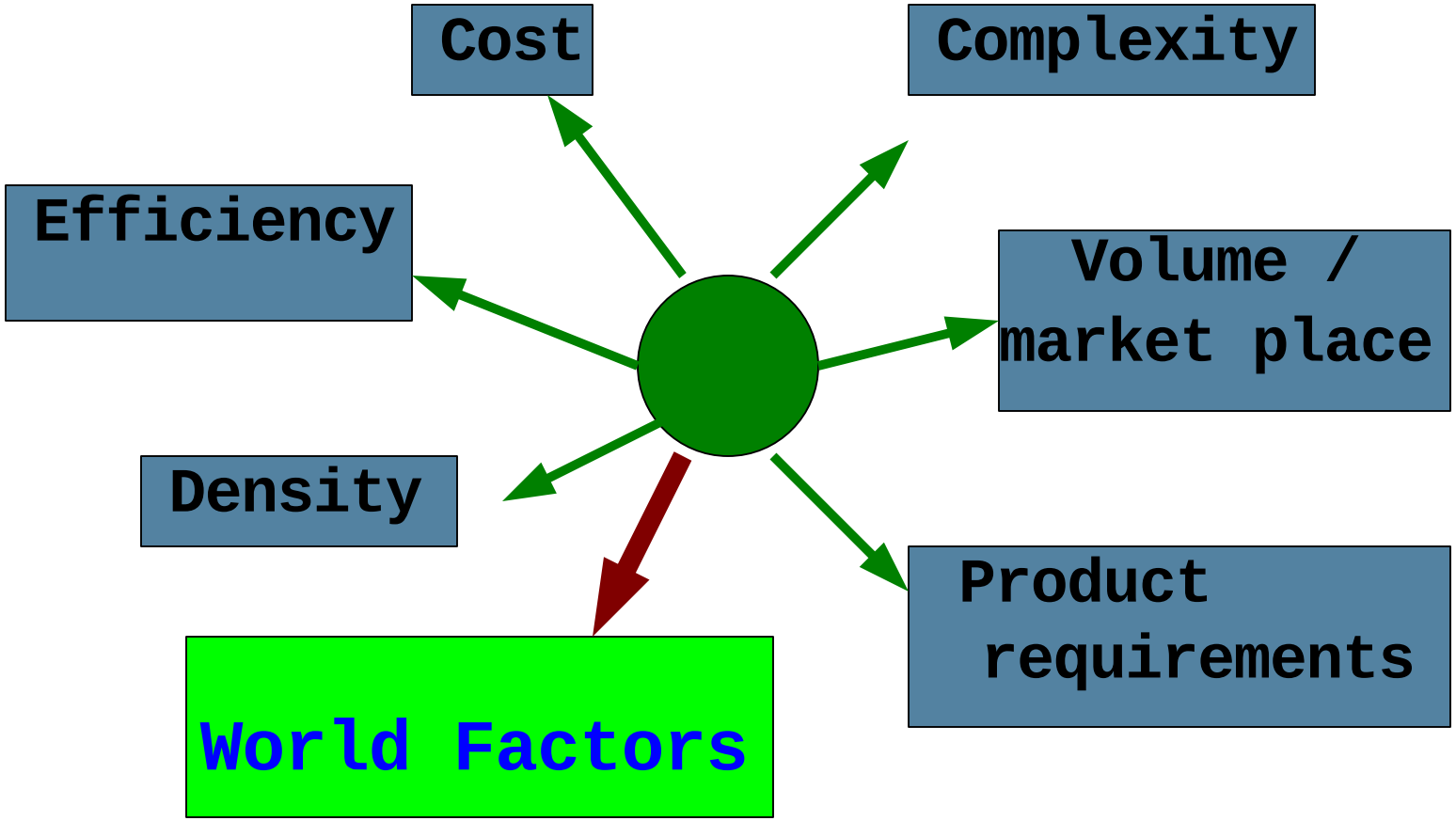

Engineering objectives

- **Once stated as :**

  Designing with what is common without always inventing NEW.

  Taking advantage of what is NEW to satisfy the requirements of today

Typical Power Supply Efficiency Curves

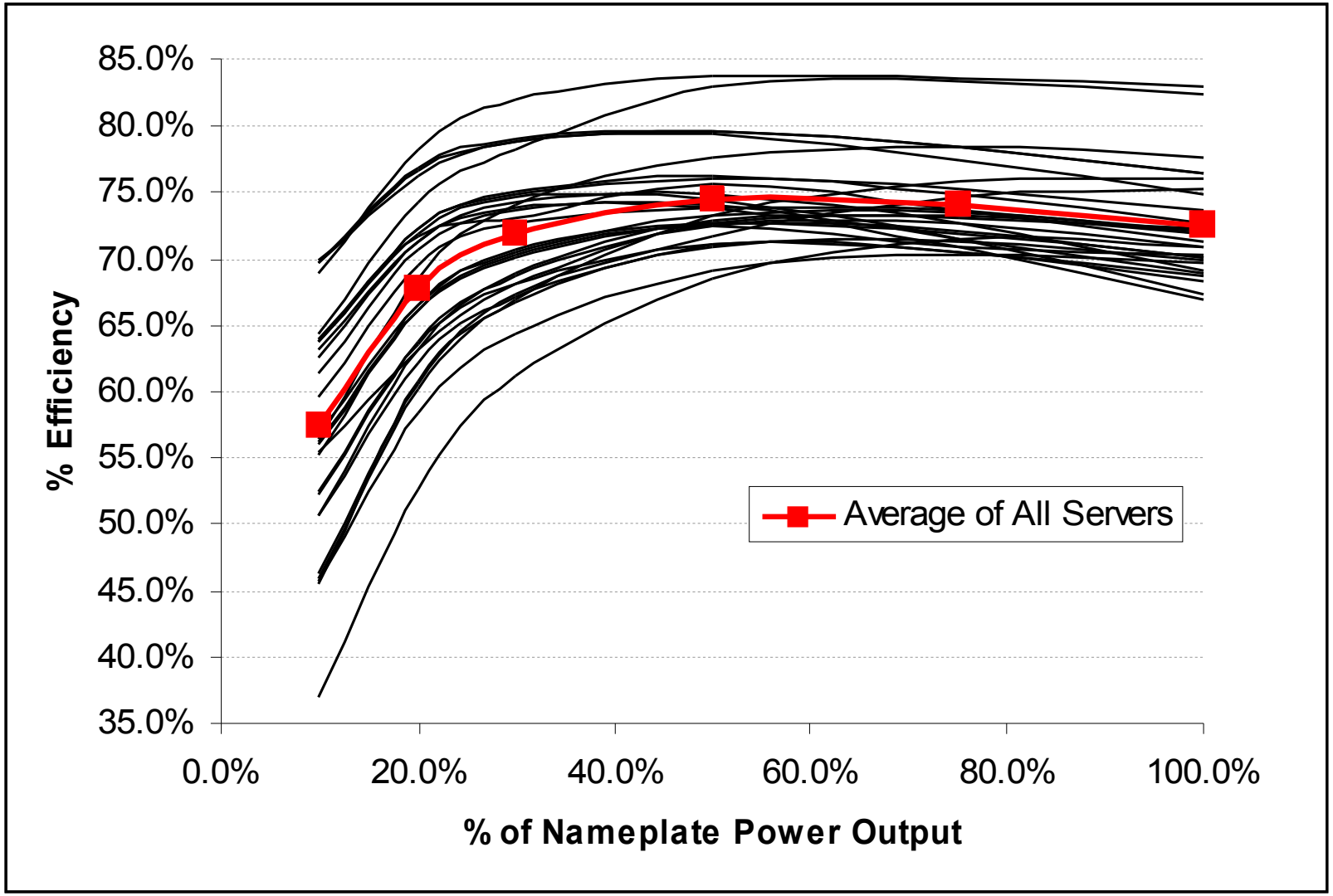

Industry Products

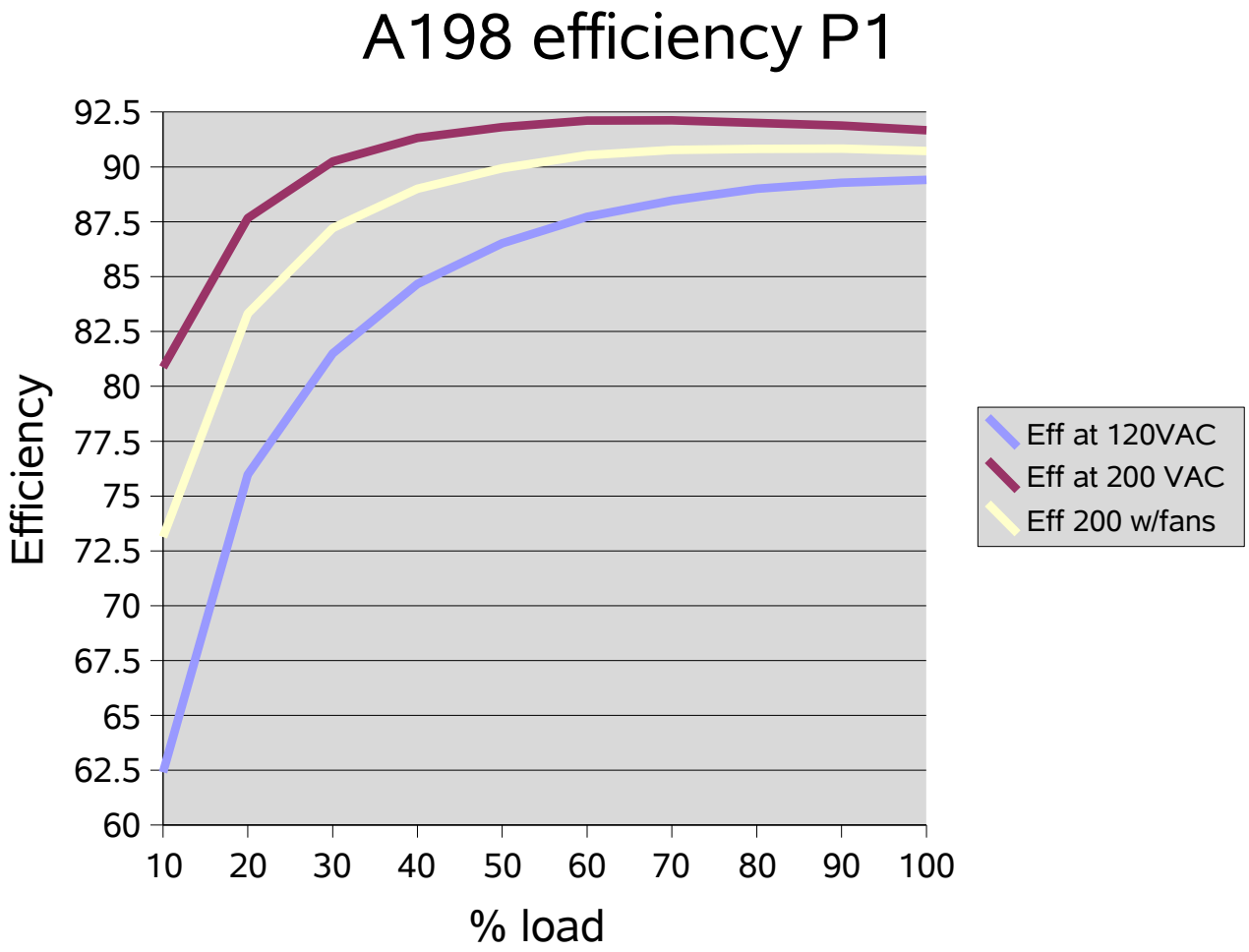

Industry Products

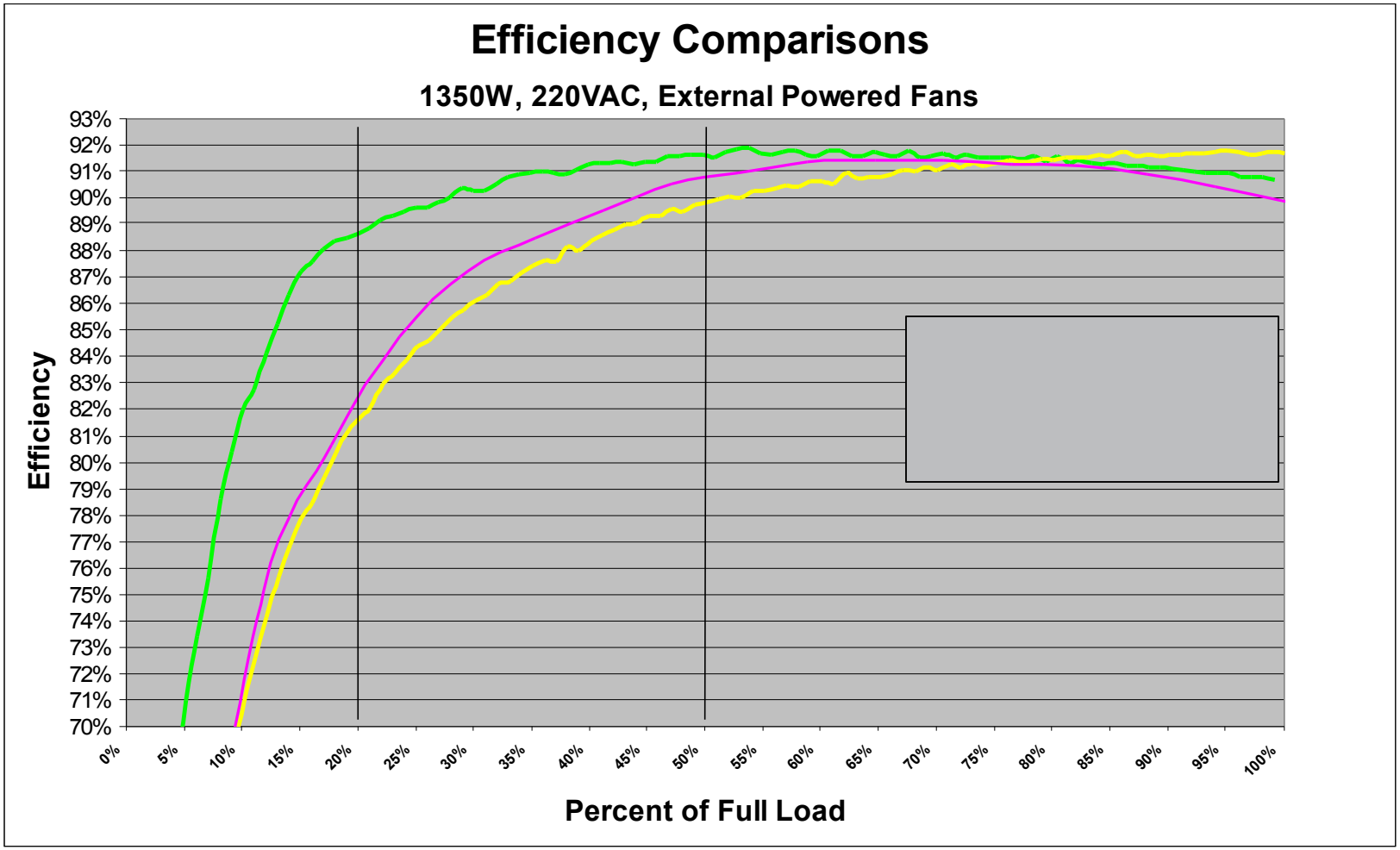

What ever they can do
We can do BETTER

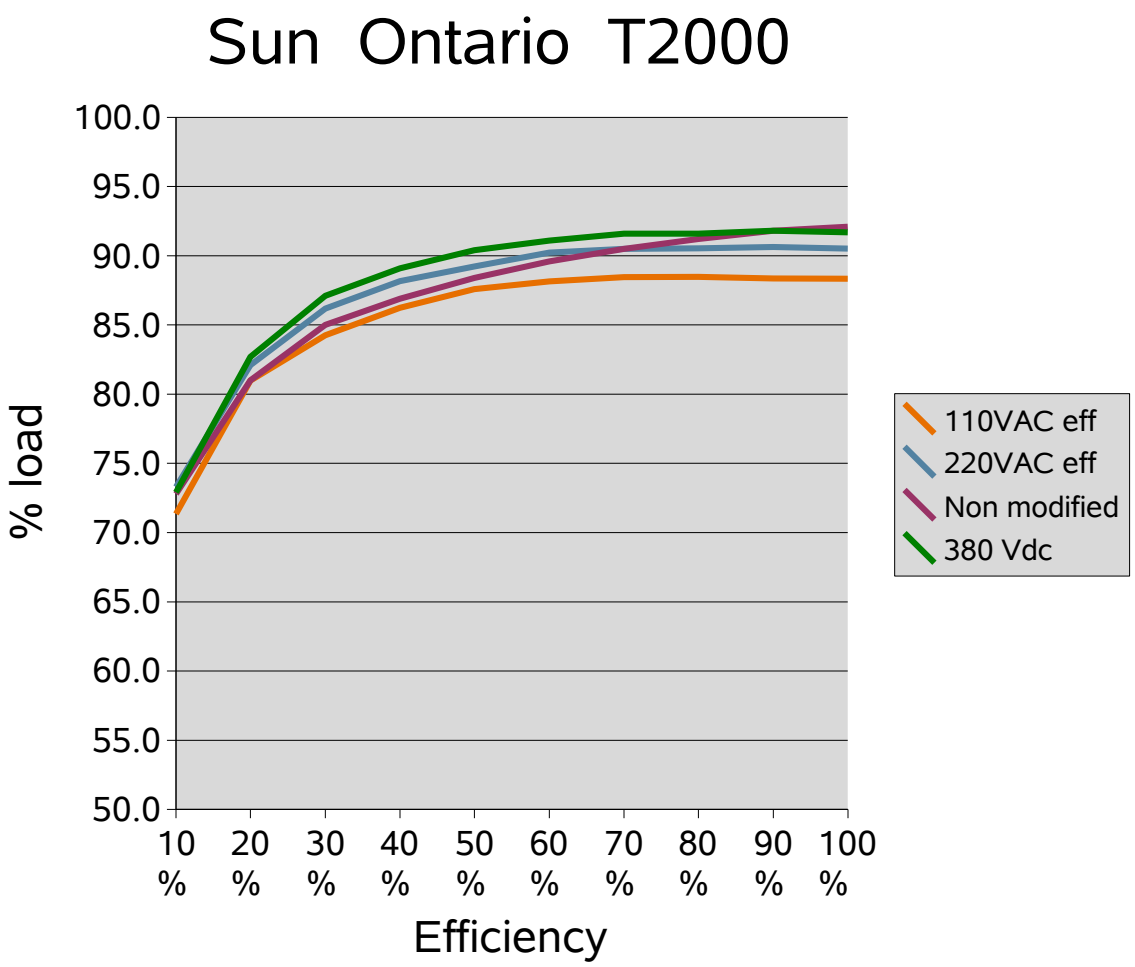

AC/DC Loss Characteristics

25% can be changed by DC Power

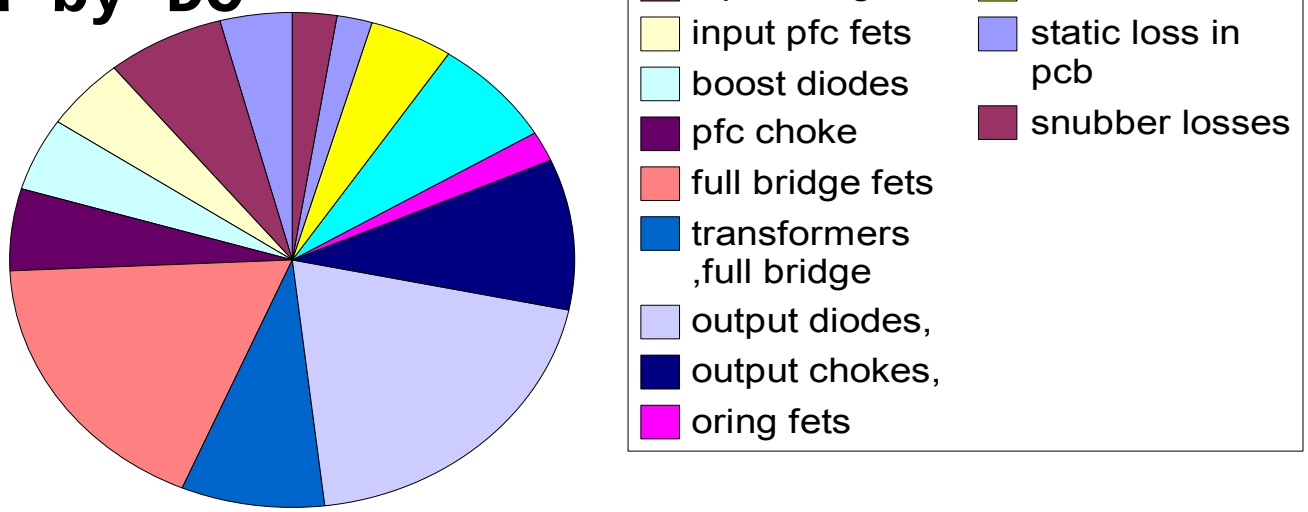

DC/DC powered supply typically 1-3% more efficient than AC/DC

Why 380Vdc for input to servers

- Present output stage of PFC typically at 380Vdc
- Component stress ratings on common silicon
- Availability of ride through devices (Rotary UPS)
- Ability to work with battery if necessary. Discharge to 320Vdc
- Utilizes industry circuits that are cost effective and reliable

Need to bring technology to application

Areas of concern

- Input protection/ fusing
- Cables and wiring
- Industry accepted connectors
- Fault currents for larger systems
- Components meeting safety requirements
- Total installed cost of system

Wide scale acceptance of application

Sun's position

- Pick off the low hanging fruit first
  - Upgrade to products that meet 80/20 guidelines
  - Optimize equipment for applications
  - Reduce power per compute operation
- Evaluate new infrastructures

  Design for application efficiencies

Conclusions

- Will the single digit efficiency improvements justify the adaptation of a new infrastructure

- Technology will make additional improvements in efficiency

Netpower® labs

Stefan Lidstrom

Netpower Labs AB
Stockholm, Sweden

350V HVDC UPS

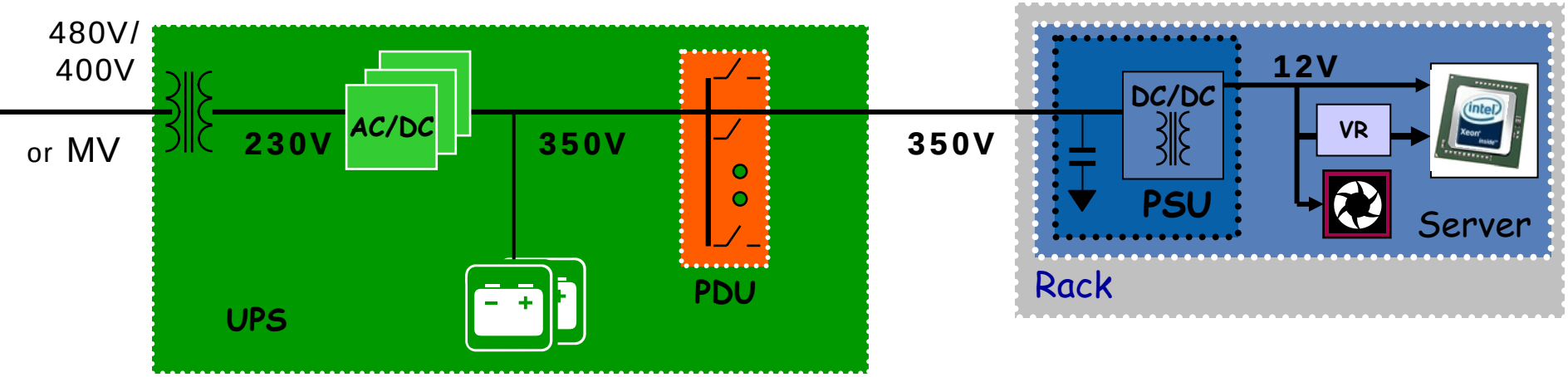

Voltage levels

- Battery data
  - Battery connected floating on distribution bus
  - 26 blocks of 6-cell lead-acid blocks (nominal 12V)

  - Fully charged

    2.25V per cell => 351V (26x6x2.25)

  - Discharged

    1.70V per cell => 265V (26x6x1.7)

Standard ATX or server PSU

- Standard PSU
  - Most standard server PSU's have wide voltage inputs 100-240 VAC +/- 10%
  - <u>Highest voltage:</u>
  - 240 +10% = 264 VAC
  - Peak voltage is: 264 x 1,41 = **373 V**
  - <u>Lowest voltage:</u>
  - 100 -10% = 90 VAC
  - Peak voltage is: 90 x 1,41 = **127 V**

<u>350V DC gives lower component stress compared to 240VAC!</u>

350V arguments

- 350V
  - 350V makes it possible to use standard “off the shelf” equipments designed for 370VDC
  - 350V can use the same component set as a 240VAC design
  - Possible to have universal (AC or DC) PSU’s
  - Low cost components (capacitors, mos-fets etc.) normally have a maximum voltage of 400-450VDC

  - 2-phase ”Edison systems” with +/- 350V can be used where power requirements are large (same system comp.)
  - 700VDC is used in railway/subway systems, existing components can be used

350V HVDC UPS

1,5 kW – 54 kW

UPS Cabinet includes:
- Distribution & Battery Fuses
- AC Fuses
- Power Control Unit (-remote management)
- 2 - 36 Rectifier Modules - 1500W
- Hot swappable rectifiers
- Battery 350V
- Modular architecture enables systematic growth up to 54 kW

Filter/insulation Transformer

Ongoing tests in:

- **Japan**
- **France**
- **Sweden**

System details

- 350V HVDC UPS:
  - Unisolated rectifiers for highest efficiency
  - 350V makes it possible to use a lot of “off the shelf” equipments
  - CE certified 2006
  - Designed with UL recognized components (full UL-listing Q4 2007)

  - Cost
    - Due to the fact that one conversion stage is removed (DC/AC) compared to a double conversion AC UPS, high-volume cost is supposed to be at least 30% lower than a conventional AC UPS.

Efficiency

- 96 %
- Including 400V or MV transformer!!

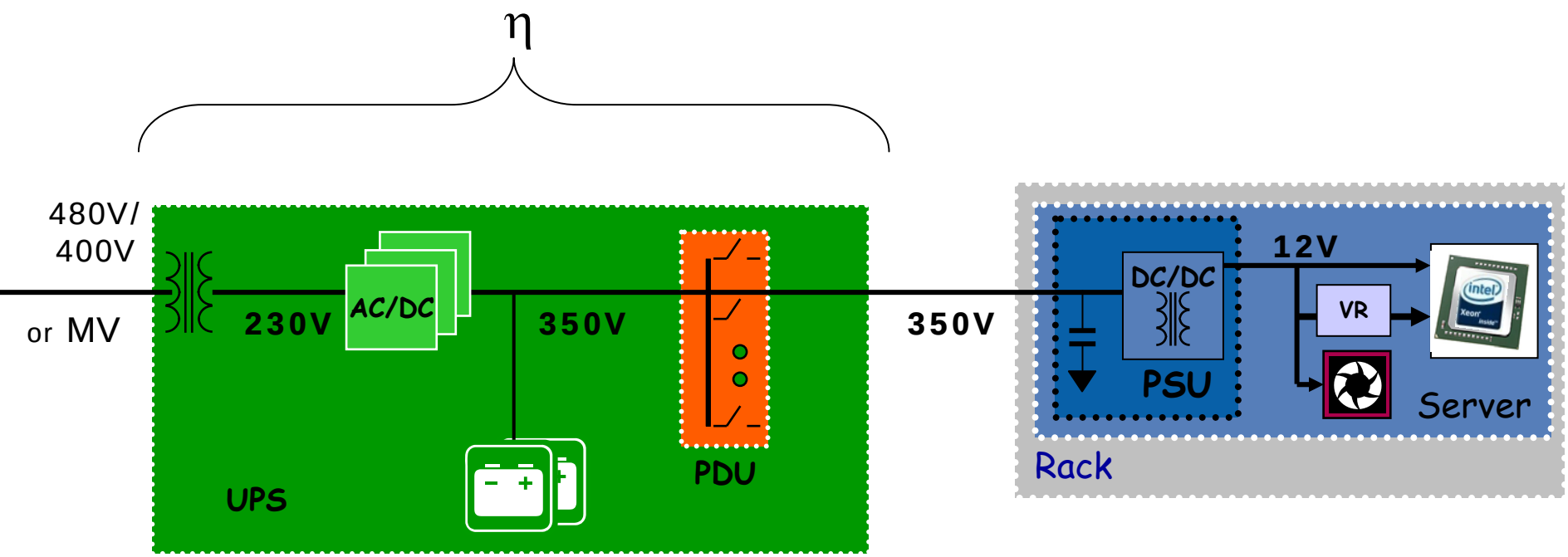

Simplicity is the key to reliability

HVDC UPS-solution
Control Parameter DC:
1. V

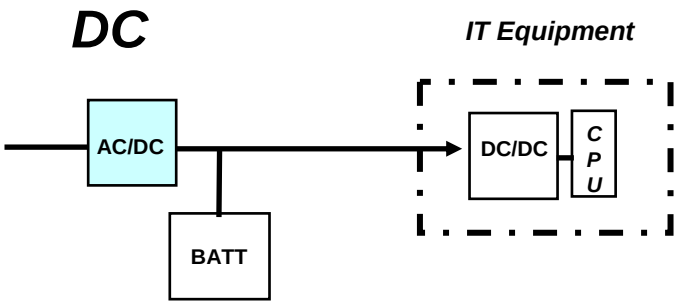

Traditional UPS-solution
Control Parameters AC:
1. V
2. Hz
3. Phase
4. Waveform

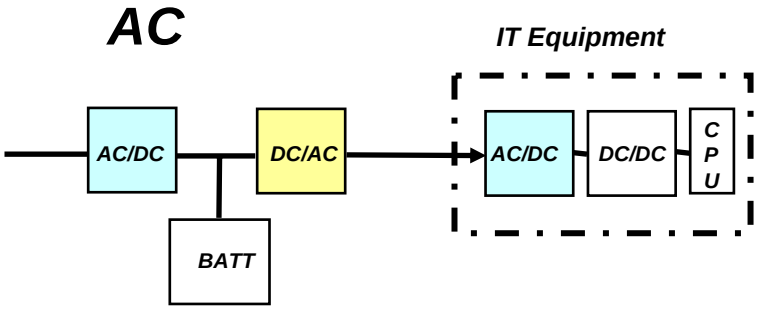

Biggest challenge :

- **Servers, routers, backup units etc. must have DC inputs or universal AC/DC inputs!**

PSU design:

- Possible to make universal (AC or DC) PSU's
- Bypassing PFC circuitry if DC used (automatically or manually), PSU efficiency could be better than 90%!

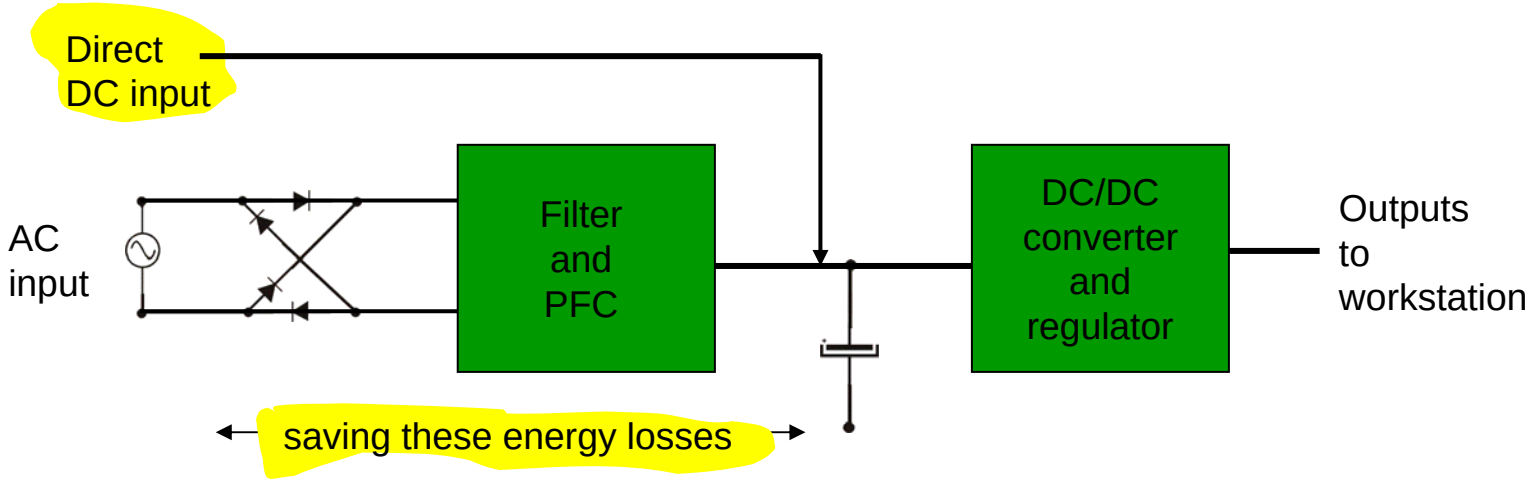

Thank you
for your interest!

Netpower®
labs

Copyright Netpower Labs AB 2007

Multiway portable-socket-outlet

Features:
- New 400V DC plug
- 8 Outputs
- 10 m cable

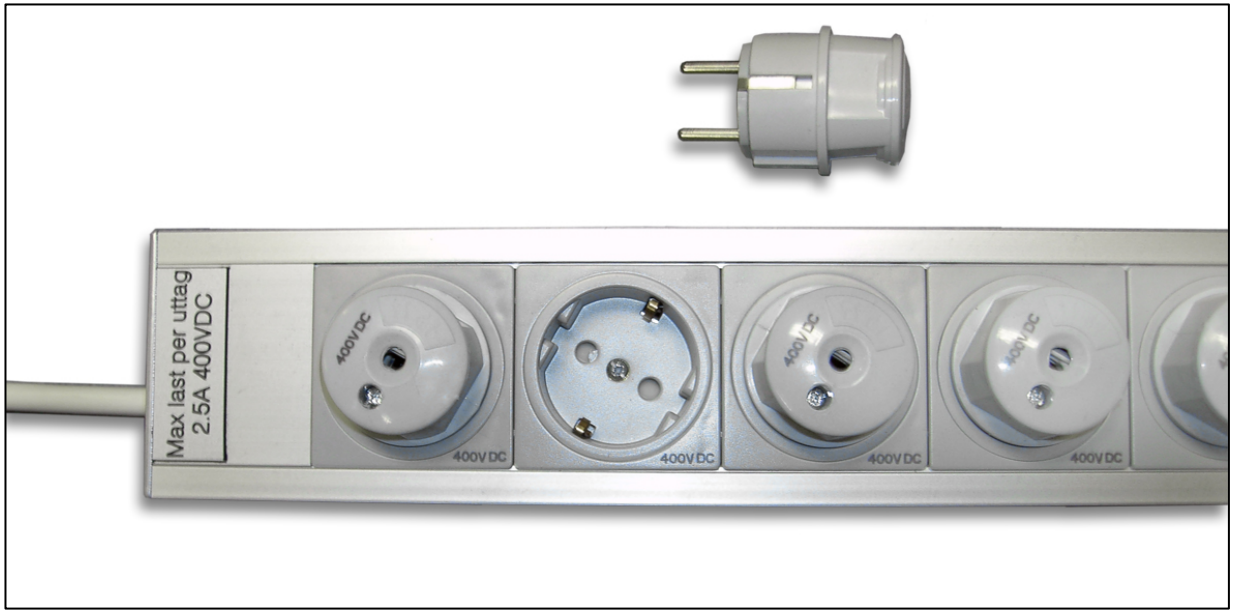

HVDC vs. AC UPS

AC UPS

- IT equipments (servers) 10 kW
- Losses AC/DC (70%) 4.3 kW
- Losses AC UPS (85%) 2.5 kW
- Power to UPS 16.8 kW
- Power cooling 6.7 kW
- Data Room total 23.5 kW

Energy costs per year:
24 703 EUR (0.12 EUR/kWh)

HVDC

- IT equipments (servers) 10 kW
- Losses DC/DC (88%) 1.4 kW
- Losses DC UPS (96%) 0.5 kW
- Power to UPS 11.9 kW
- Power cooling 4.7 kW
- Data Room total 16.6 kW

Energy costs per year:
17 420 EUR (0.12 EUR/kWh)

30 % higher energy **Efficiency** than AC

30 % Energy **Savings**!

2-phase ”Edison” system 350/700VDC

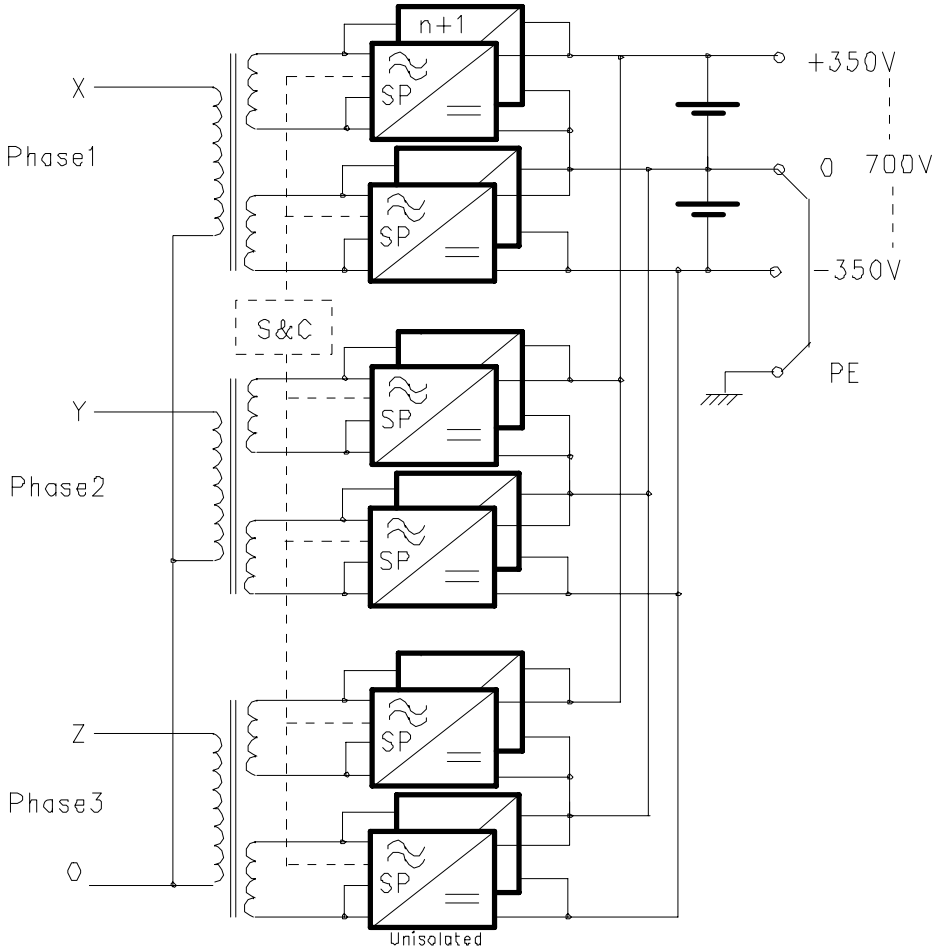

Topics to be addressed :

- Nominal voltage level of distribution bus
- Voltage range of the distribution bus
- Connection of energy storage, e.g. batteries
  - Float on distribution bus or connect through DC/DC?
  - Battery voltage range
- Equipment :
  - Server power supply designs
  - DC UPS (Rectifier) designs
  - Outlook for transitioning “Beta” equipment to full UL-listing status
  - Estimated equipment cost
    - We suggest expressing this as a ratio to the cost of a high efficiency AC architecture with a double conversion UPS
- Your company’s current and projected activities in this space?
  - E.g. are you planning a demo; developing/marketing equipment?
- What do you consider the biggest challenges to DC distribution becoming a reality in data and telco centers?
- When do you think this will become a reality?

300 Vdc Demonstration in Sedai Project*

Keiichi Hirose
NTT Facilities, Inc. Tokyo Japan

July 12, 2007

Sendai Project

- 4 year project (2006 - 2009)
- Multiple power quality supply (4 AC and 1 DC)
- Optimized operation (Coordination) between grid power and distributed generators (DG)

Here is DC Demo system in this building.

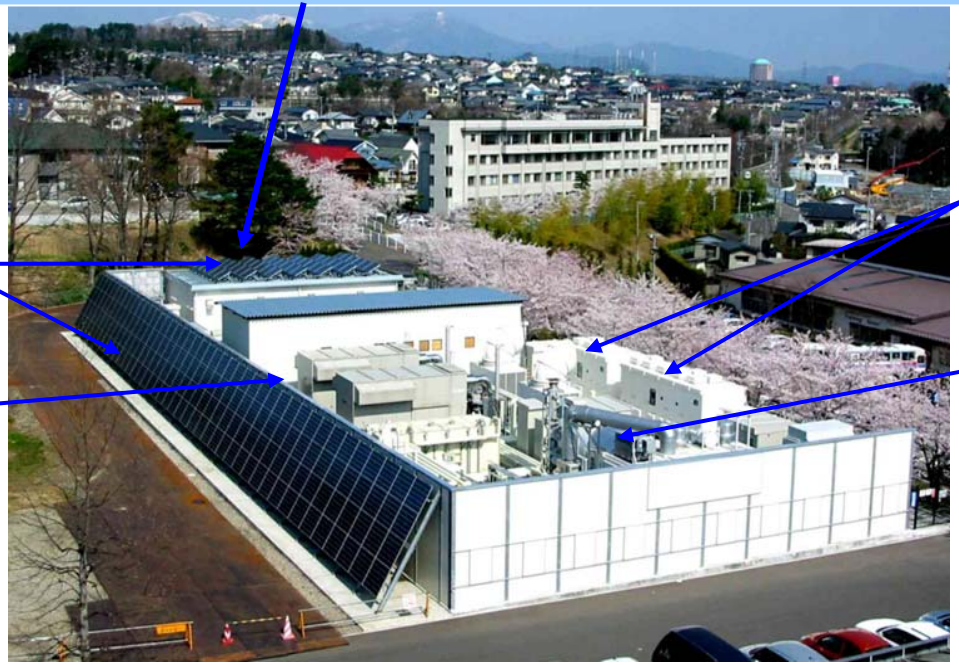

PV Panels
50 kWp

Gas Gen-sets
350 kW X 2

DVRs
200 kVA
600 kVA

MCFC
250 kW

This demonstration project is entrusted by The New Energy and Industrial Technology Development Organization (NEDO)

Defined Power Quality Levels

Requirements	Category				
	DC Power	AC Power			
		Level A	*Level B1*	*Level B2*	*Level B3*
Interruption	NI	NI	Less than 15 ms	Less than 15 ms	Less than 15 ms
Voltage Dip	Y	Y	Y	Y	Y
Outage	Y	Y	Y	Y*	-
Voltage Fluctuations	Y	Y	-	-	-
Voltage Harmonics	Y	Y	-	-	-
Voltage Unbalance	N/A	Y	-	-	-
Frequency Variation	N/A	Y	-	-	-

Note:
NI: No Interruption, Y: With compensation
-: Without compensation, *: When Gas engine sets generated

System Configuration

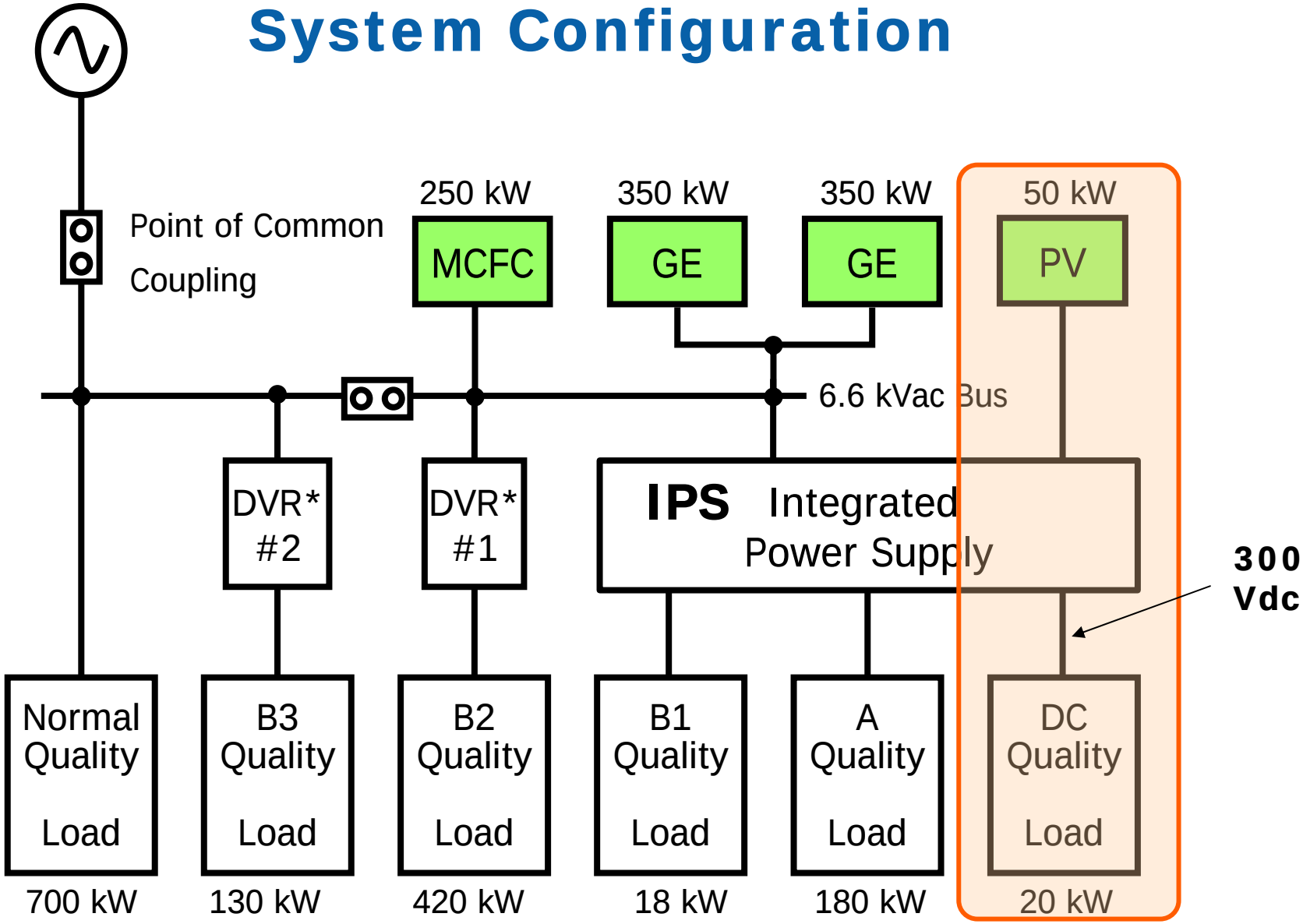

Low — Security, Quality, Reliability, and Availability (SQRA) — High

System Configuration（DC circuit）

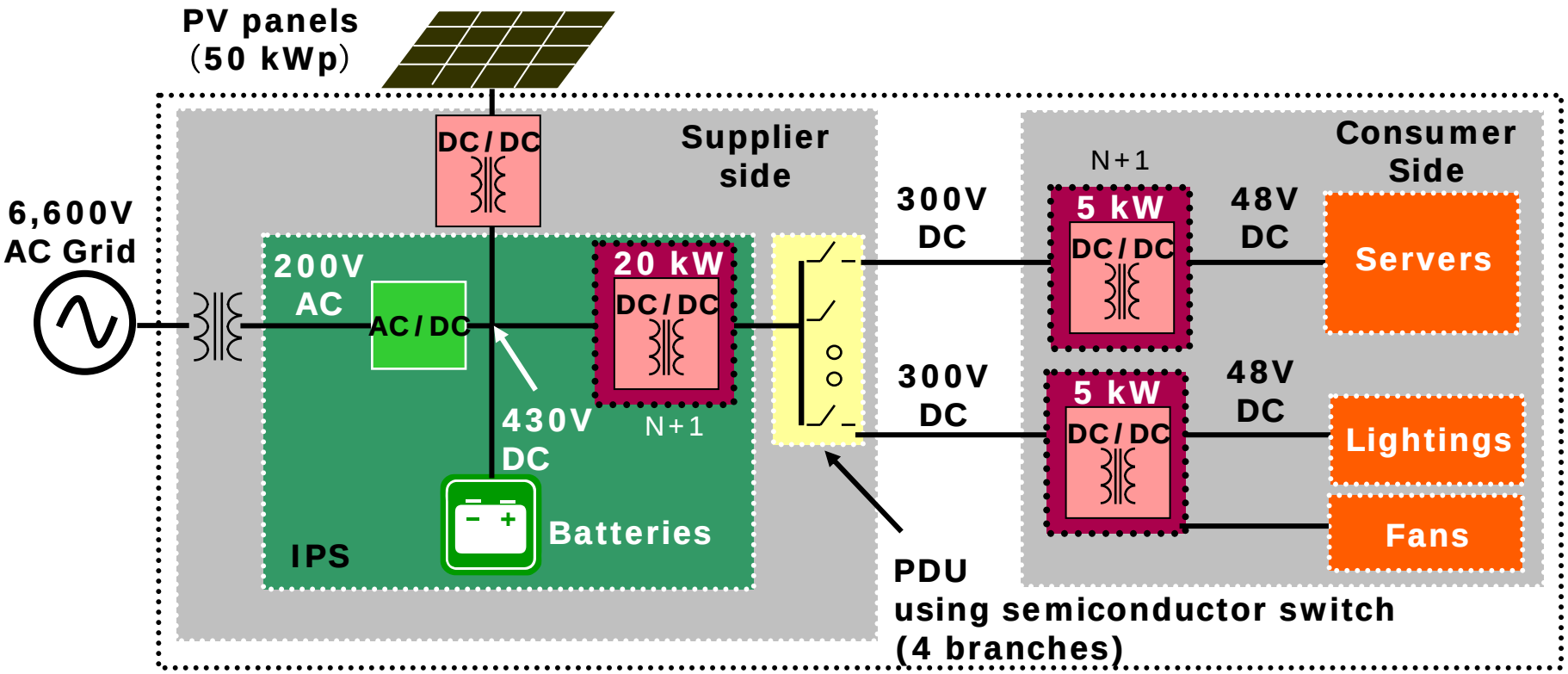

430Vdc	: AC/DC output voltage with Lead-acid Batteries : DC bus voltage for power plant
300Vdc	: Distribution voltage
48Vdc	: Input voltage range of load equipment

Cables (Dummy) and Load

Impedance Units (Up to 500 m)
(1 unit = 100 m@100 sq.)

Specifications

Nominal voltage level of distribution bus	300 Vdc (See next Page)
Voltage range of the distribution bus	270 – 330 V (+/-10%)
Connection of energy storage (VRLA Battery) @ 430Vdc bus	Floating charge:2.23 V/cell End of discharge:1.6 V/cell@30min. Max. voltage : 2.25 V/cell
Equipment	Dc-dc converters (300/48) @ 300V Servers @ 48V Fans @ 48V Lightings @ 48V

Why 300Vdc?

- From AC system voltage
  - 100 V (The lowest in the world) or 200 V
  - 200 Vrms X 1.41(peaK) X 1.1(max) = 310 V

- Regulations (Ordinances in Japan)
  - Definition of Regulation (<750Vdc)

    Scope of low voltage

    Grounding resistance

Law, Regulation, and standards in Japan

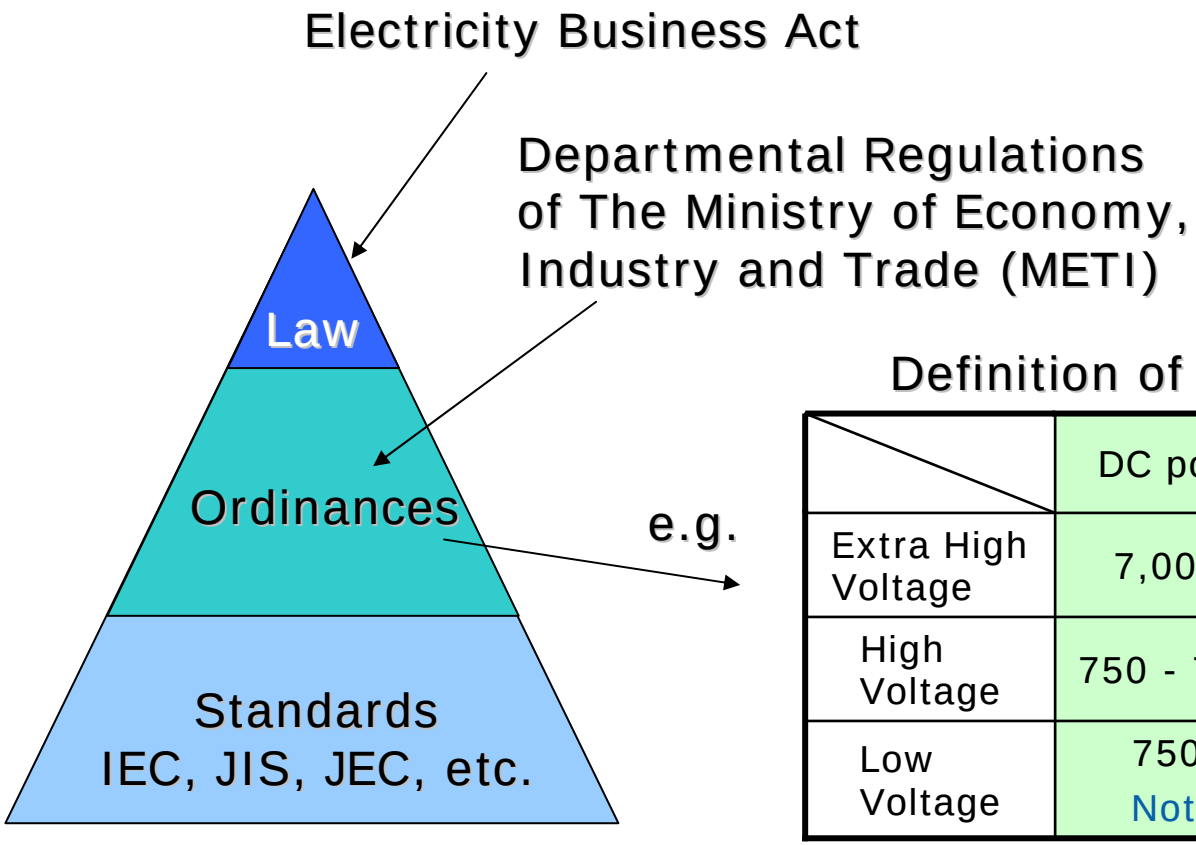

Definition of Voltage levels

	DC power	AC power
Extra High Voltage	7,000 >	7,000 >
High Voltage	750 - 7,000	600 – 7,000
Low Voltage	750 < Note	600 <

Note: Amendment 2006 Feb.
For Installation of DC distribution system using PV Panels in the buildings
Up to 450 Vdc

Nominal voltage for DC power supply

When we use the nominal voltage of less than or equal to 300 Vdc in Japan...,

- **The kinds of grounding type in Japan**

  We can hold down the cost for grounding construction.

Grounding type	Grounding resistance [Ω]	Nominal voltage V_n [Vdc]
A	10	$750 < V_n$
C		$300 < V_n \leq 750$
D	100	$V_n \leq 300$

Future Plan (Under Consideration)

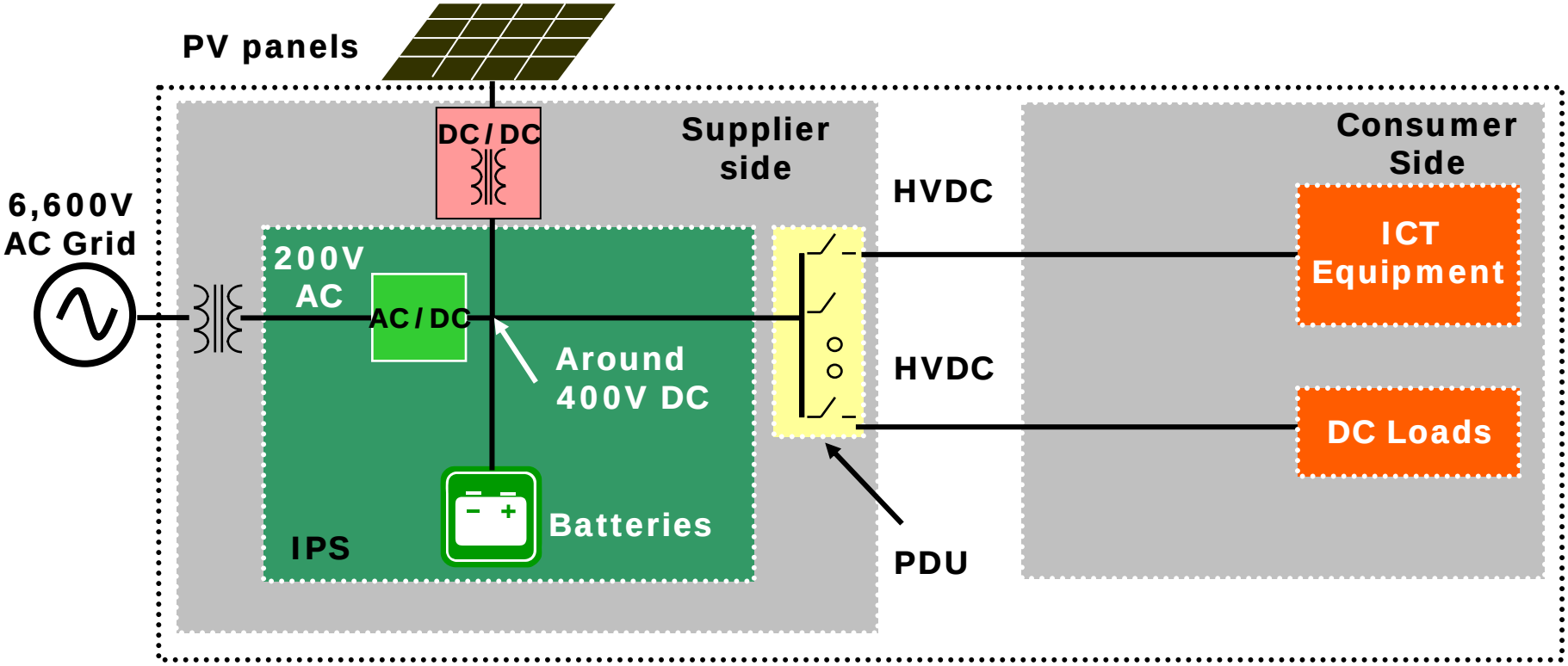

The System (bus) voltage is under consideration.

Need
- **Global Standards on HVDC powering, safety, etc.**
- **Amendment of Ordinances**
- **And Promotion Activities**

Validus DC Systems

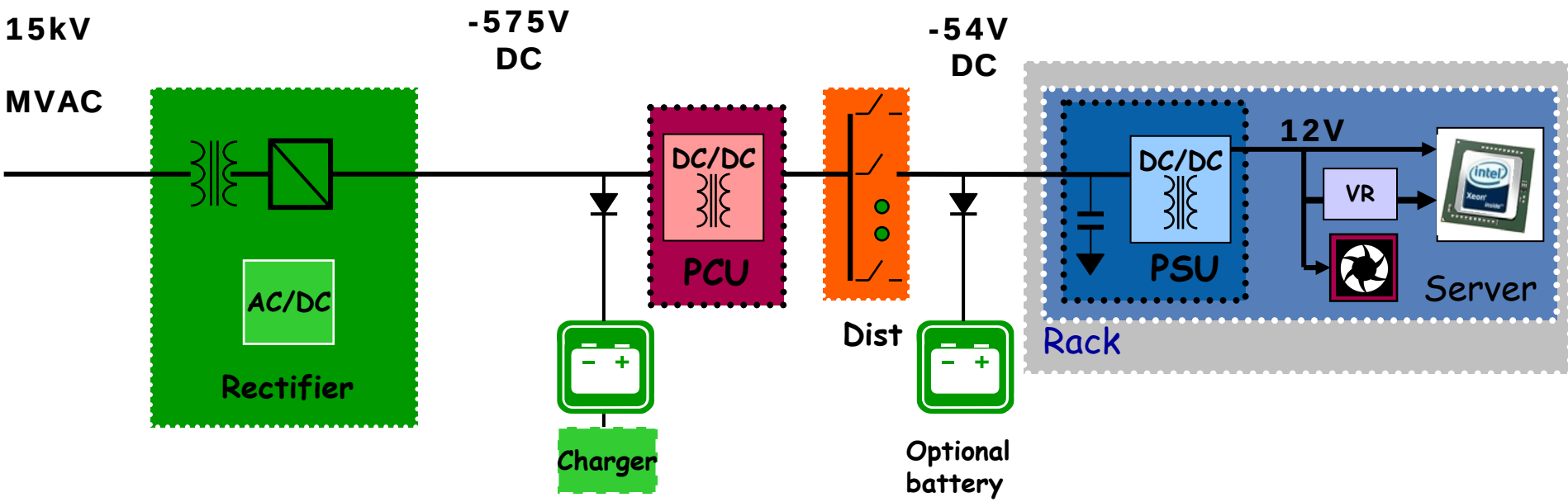

2N System Arrangement

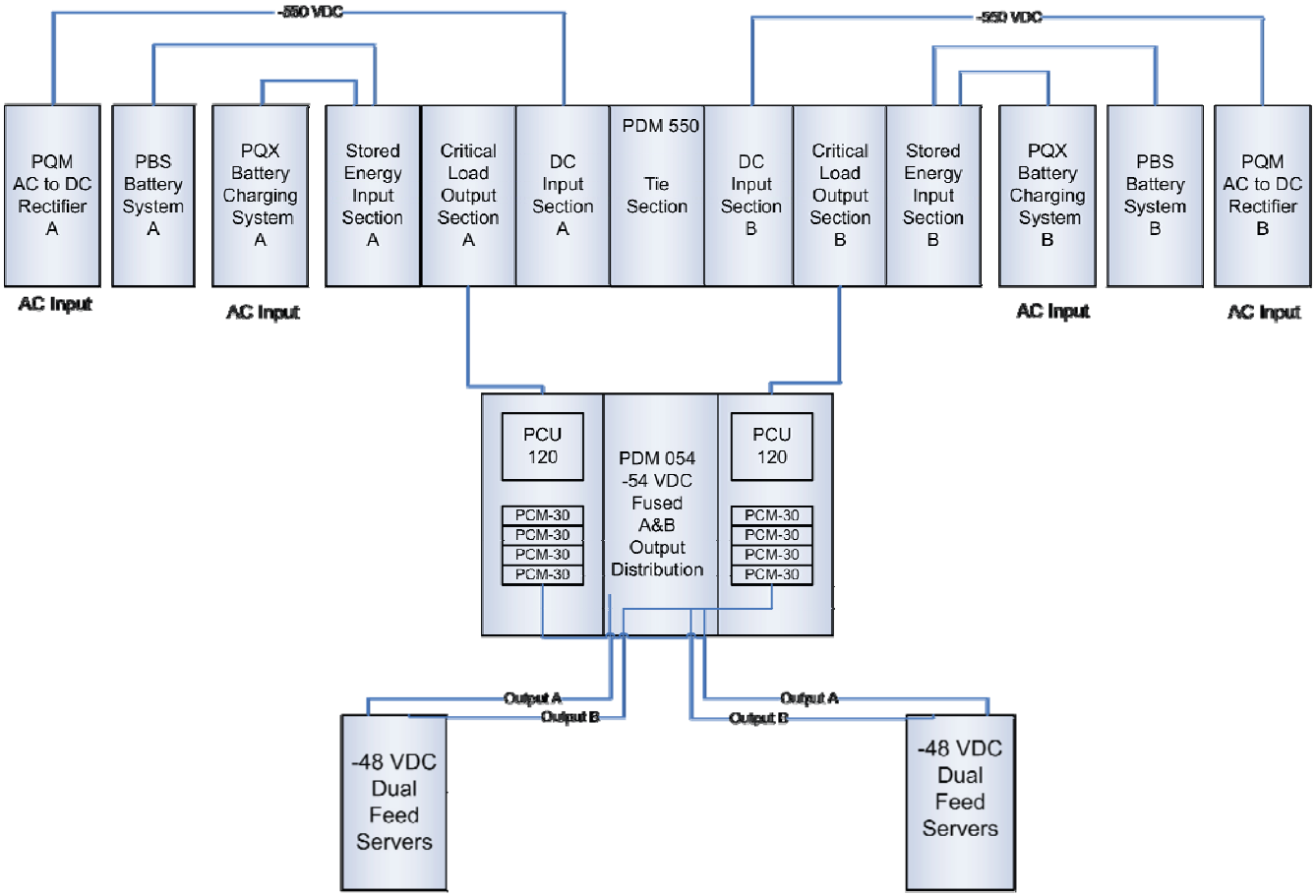

PCU 2N, 2N+1 Configuration

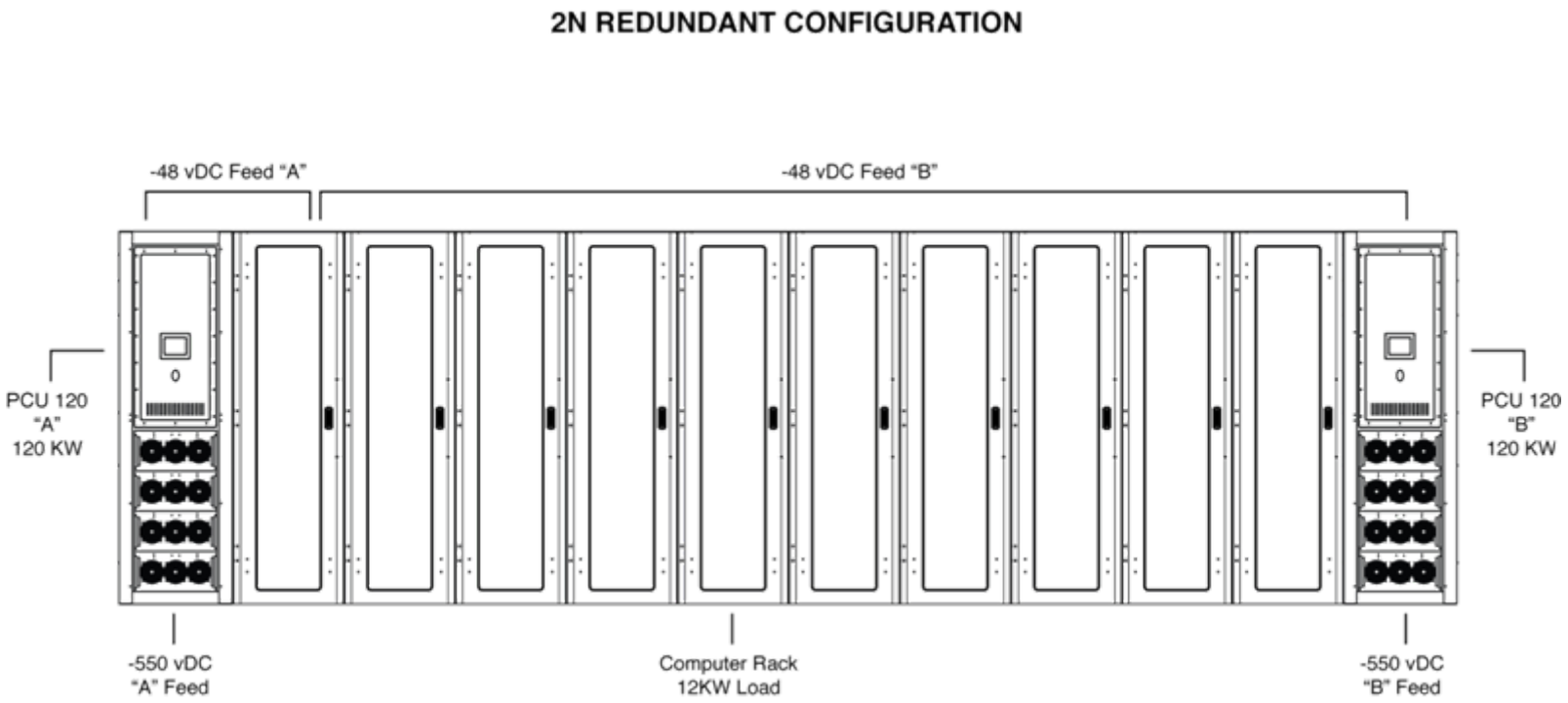

Validus DC Voltages/Storage

- Nominal voltage level of distribution bus,

  -550-575 VDC

- Voltage range of the distribution bus,

  -48-54 VDC

- Connected energy storage,

  Batteries, Fuel Cell, Flywheel, PV

- Connect to DC bus,

  Diode

- Battery voltage range,

  -540 – 410 VDC

Validus Equipment

- Server power supply designs, **UL Approved -48VDC dual or single**
- DC (Rectifier) designs, **High reliability, 12 Pulse**
- Outlook for transitioning "Beta" equipment to full UL listing status **Accomplished for safety and noise**
- Estimated equipment cost, **Similar to that of an AC UPS system powering the same amount of processing**

Validus Design

- Your company's current and projected activities in this space?

  Beta stage successful completed, available today in 2N full power systems from 150 to 2,000 KW from 208 V to 34 KV

- What do you consider the biggest challenges to DC distribution becoming a reality in data and telecommunications centers?

  Commercially viable DC integrated power and cooling system for technical facilities

- When do you think this will become a reality?

  Within the quarter

Validus System Efficiency

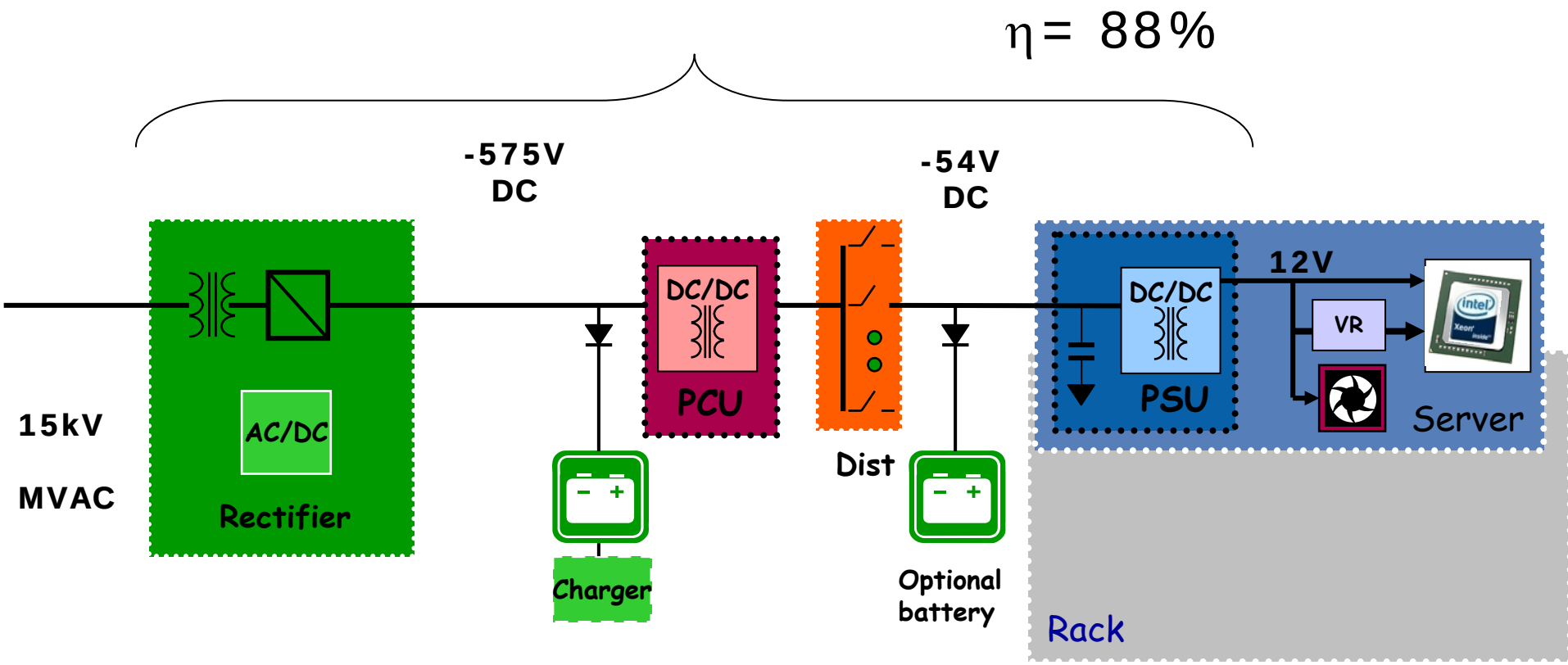

Validus DC Value Proposition

- Commercially available today
- Culturally acceptable and safe
- Reduction of copper
- UL and FCC Part 15B Approved
- 600 VDC cooling design
- Easily applied to data or telecommunications
- Low voltage dist with high density,
- Ease and flexibility of design, parallel, catcher, 2N
- Easily compatible with energy storage, renewable energy systems
- Compatible with all -48 VDC backplane servers

Voltage Panel Template

PSMA Comments- Bharat Shah

July 12, 2007

Proposed architecture

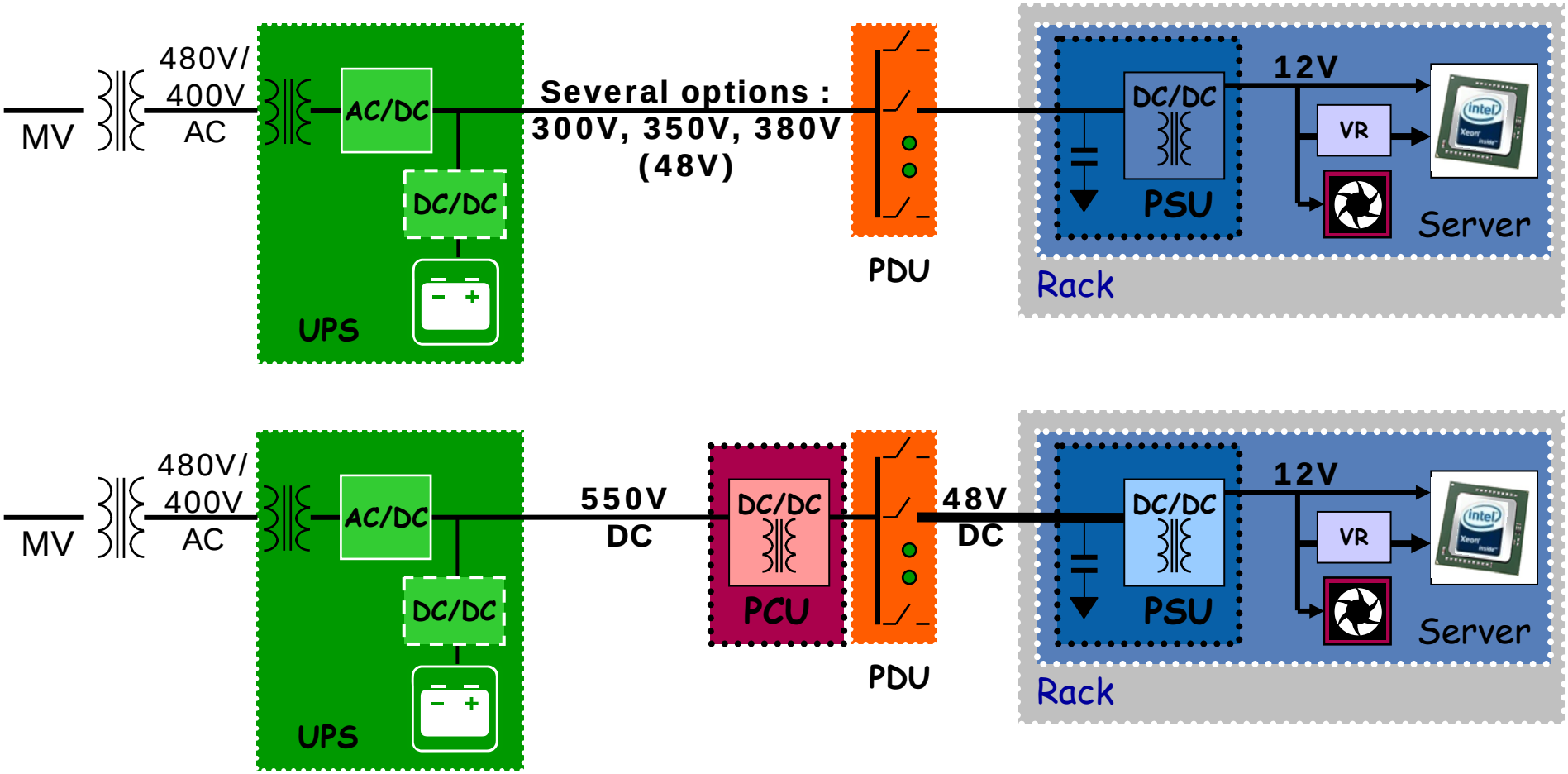

Pick one of these architectures and modify if necessary

Collection of comments from PSMA members

- Dr. Safiuddin- University of Buffalo
  - strongly recommend selection of a DC voltage which is a multiple of 8 VDC [24, 48, 120, 160, 240, 320 VDC]. Power at 160 VDC can be used to operate 120 VAC motors, 320 VDC can be used to operate 240 VAC motors and 640 VDC can be used to operate 480 VAC motors. Also, PV and fuel cells can then be easily integrated into the DC bus for distributed generation systems at 320 VDC and 640 VDC levels. The electronic ballasts of FL tubes can operate on 160 VDC or 320 VDC depending on their design for US or EU markets.
- Dr. Alex Leveran- Power One
  - Cost data is not available. Need to prove the viability of this concept.
  - Safety approval of high voltage DC across the entire operating range needs to be formulated and standardized.
  - Availability of multiple source interrupting/connectivity devices is limited
- Richard Hannon- Emerson Network Power
  - For the imbedded power supply the 380vdc input bus is a natural.
  - Today we take the 120-240vac input and use a PFC boost converter to develop an internal 380vdc bulk voltage
  - The 380vdc input is the simplest to implement, and lowest cost for the power supply industry.
  - This approach would completely eliminate PFC boost converter, improving overall PSU efficinecy by 4-5 % points
- Randhir Malik- IBM
  - IBM uses 350V DC at rack level and over the years have found that using 350V DC over the whole data center is more costly than at a Rack level. There are other issues such as the equipment that operate on AC which makes a big issue for adoption.
  - IBM currently uses 480/230V AC three phase coming to the rack without any need of extra PDU. However the discussion is going on what really a high voltage DC buys us that a solution at rack level or multiple rack level is not providing us.

New Power for Rural Consumers

By

Daniel Wiegand M. Y. Soliman

Advisor

Dr. M. Safiuddin

A project completed in MY-T farms, Batavia NY

Sponsored By

Niagara Mohawk

Participants

My-T Acres

Buffalo Power Electronics Center

SUNY at Buffalo

Objectives:

Compares two methods of transmitting power to isolated load (MY-T Farm, Batavia, NY):

Method 1: Transmits the available single-phase power to a motor drive inverter.

Method 2: Transmits DC to the same motor drive.

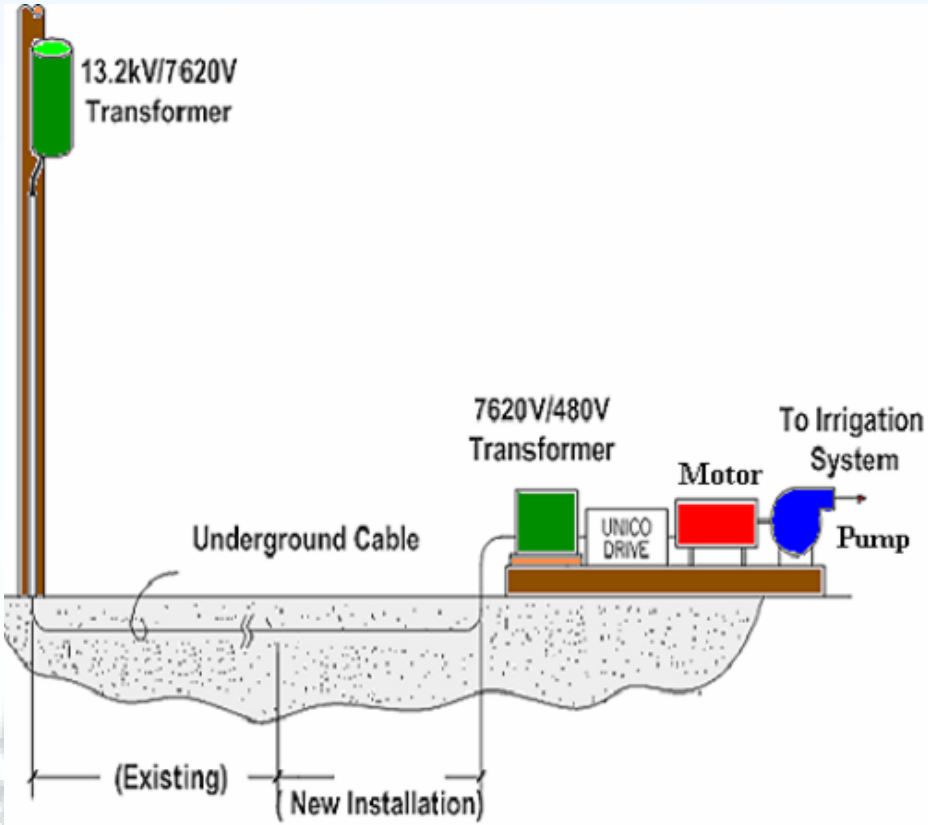

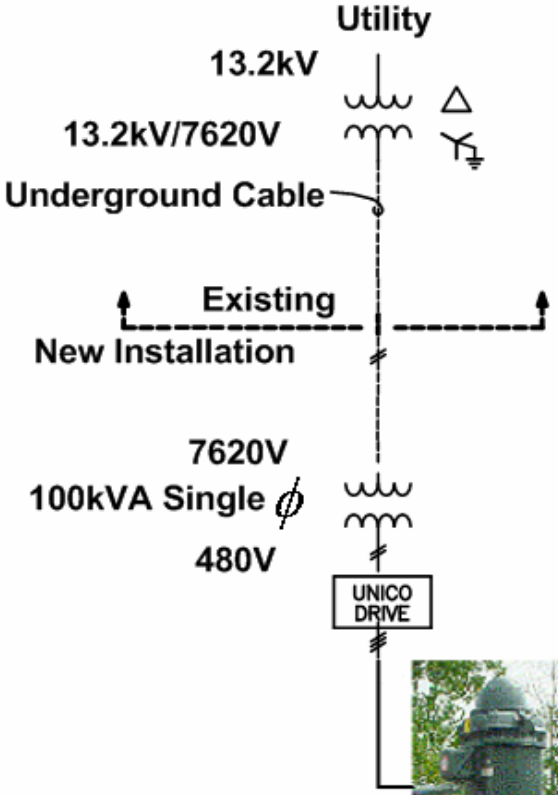

<u>Method 1</u>:Single-phase AC transmission

Sponsors:

Niagara Mohawk
A National Grid Company

UNIVERSITY AT BUFFALO
State University of New York

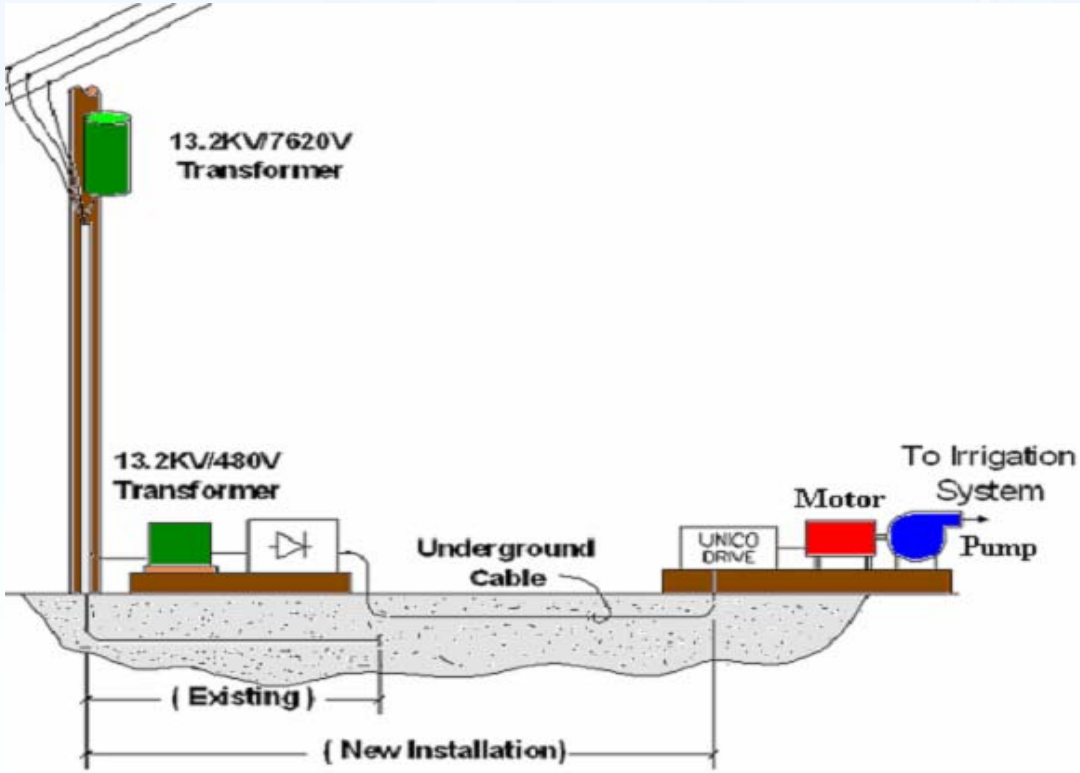

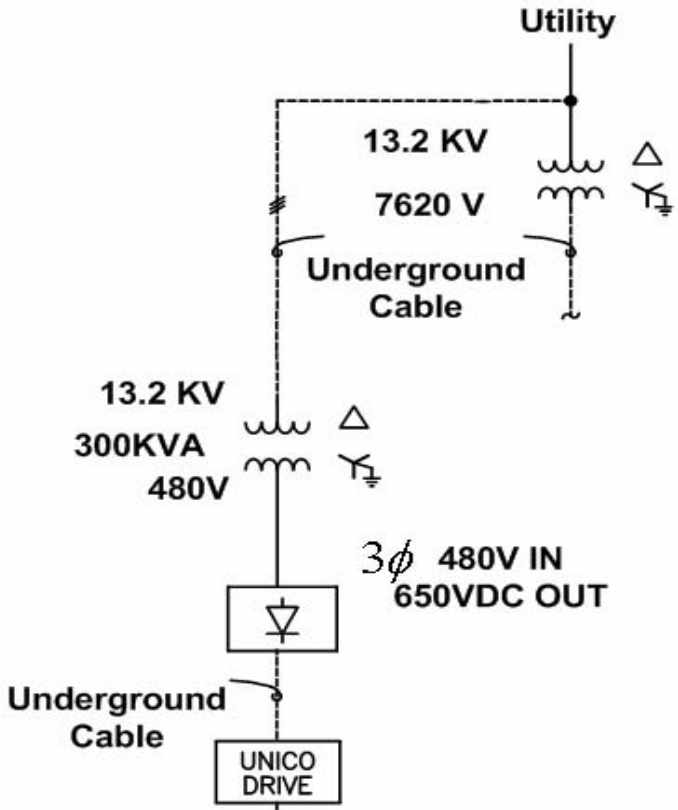

Method 2: DC Transmission

Sponsors:

Niagara Mohawk
A National Grid Company

UNIVERSITY AT BUFFALO
State University of New York

Results

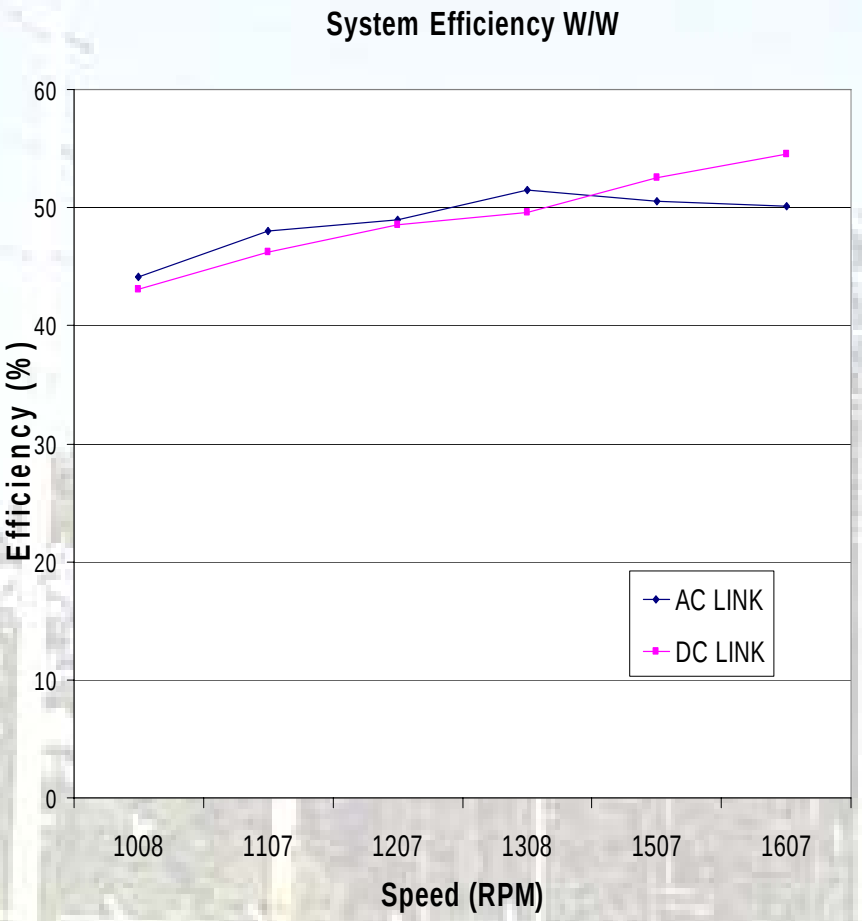

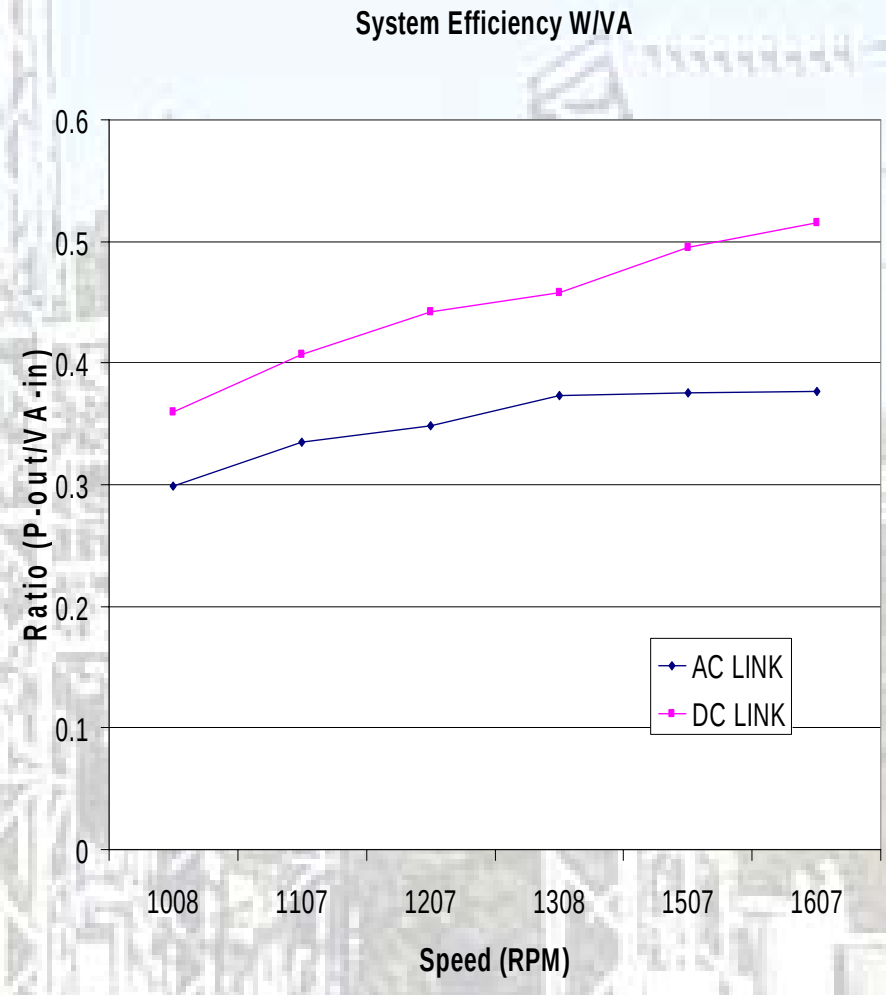

Sponsors:

Niagara Mohawk
A National Grid Company

MY-T ACRES
Cali Farms

PEC

UNIVERSITY AT BUFFALO
State University of New York

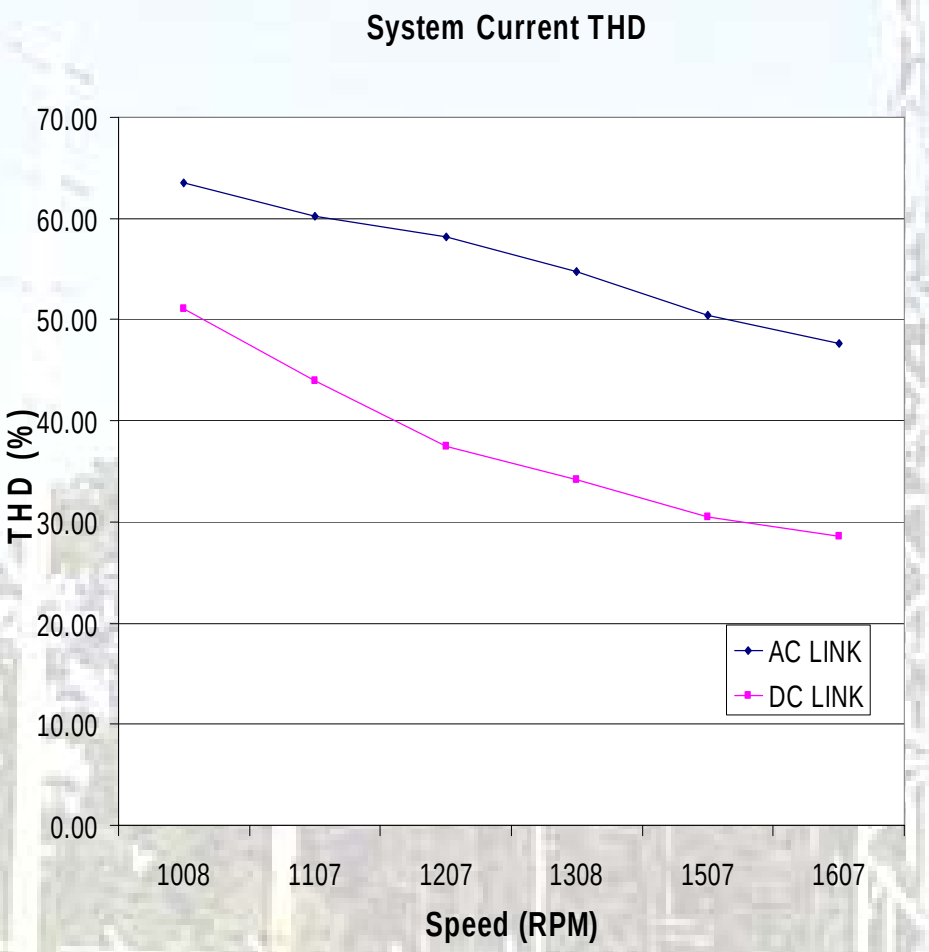

Inside the UNICO motor Drive

The motor Attached to the pump

Sponsors:

Niagara Mohawk
A National Grid Company

MY-T ACRES Cell Farms

PEC

UNIVERSITY AT BUFFALO
State University of New York

Conclusions

- **Both DC and Single-phase AC transmission are cheaper than the 3-phase AC transmission for isolated loads (Limited by the load values).**

- **DC power link offers several advantages over AC link:**
  - **More efficient.**
  - **Allows lower components ratings**
  - **Lower harmonic content on the supply.**
  - **Power factor improvement.**
  - **Can be used to supply large loads.**
  - **Keeps a balanced load on the utility grid.**

Sponsors:
Niagara Mohawk
A National Grid Company
UNIVERSITY AT BUFFALO
State University of New York